ENW ENGINEERS NORTHWEST, INC., P.S. ~ STRUCTURAL ENGINEERS
9725 THIRD AVE NE, SUITE 207, SEATTLE, WA 98115 (206) 525~7560 FAX (206) 522~6698

PROJECT # 16038000-6 PROJECT COSTCO CAMPUS BLDG 4 DATE 1-2-2020
SUBJECT TOWER CRANE FOUNDATION DESIGN SHEET 1 OF 6
BY M.O.

JOSE L. PARADA
STATE OF WASHINGTON
25781
STRUCTURAL ENGINEER
PROFESSIONAL ENGINEER
DATE SIGNED 07-02-2020

LEAVITT CRANES

Footing loading

3610 Cedardale Road, Suite A
Mount Vernon, WA 98274 USA
1140 Thorne Road
Tacoma, WA 98421 USA
Ph: (360) 707-4253
1-844-66-CRANE
www.leavittcranes.com

Status:
Job#: COSTCO Corporate Campus Bld 4
Customer: Jackson Dean
Location: 999 Lake Drive, Issaquah, WA 98027
Reference #:
Equipment: Terex CTT561A-20
Reach, ft: 210 (m): 64
Height, ft: 181.1 (m): 55.2
Configuration: (9) HD23_22.6

or equivalent

Comments:

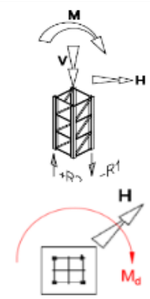

V = Axial load
M = Overturning moment
H = Horizontal thrust (force generated by wind in the direction shown)
R1 & R2 = Minimum/Maximum Loads on base supports
Md = Slewing torque moment about the centerline of the tower

All loads are reported at service level

Mode	Wind Speed	V		H		M		R1		R2		Md	
In Service	Tail Wind	1,560	kN	55	kN	6,577	kNm	-2,658	kN	1,878	kN	407	kNm
	72 km/h (45mph)	350,657	lbs	12,387	lbs	4,850,945	ft-lbs	-597,542	lbs	422,191	lbs	300,188	ft-lbs
Out of Service	Tail wind	1,260	kN	172	kN	3,917	kNm	-1,666	kN	1,036	kN	0	kNm
	151 km/h (94 mph)	283,237	lbs	38,712	lbs	2,889,030	ft-lbs	-374,532	lbs	232,902	lbs	0	ft-lbs
	Tail Wind (C25)	1,265	kN	207	kN	4,904	kNm	-2,008	kN	1,375	kN	0	kNm
	159 km/h (98.8 mph)	284,383	lbs	46,535	lbs	3,617,004	ft-lbs	-451,416	lbs	309,112	lbs	0	ft-lbs

DESIGN LOADS:

(in service)
P = 350.7 K
H = 12.4 K
M = 4,851 FT-K
T = 300.2 FT-K

(out of service)
P = 284.4 K
H = 46.6 K
M = 3,618 FT-K
T = 0

DESIGN ASSUMPTIONS:

Pile Cap Self Weight = 562 K
d = 73"
b = 24' (12) = 288"
f'c = 4 KSI
fy = 60 KSI

18" DIAMETER PILE CAPACITY: 300 KIPS (ASD)

MAX COMPRESSION: $\frac{912.7\text{ K}}{8} + \frac{4{,}851\text{ FT-K}}{(18/3)}$ = 204K < 300 K (ASD) OK.

PUNCHING SHEAR: 1.6 [(350.7 K / 4) + (4,851 FT-K / 6.7 5 /2)] = 716 K

$\frac{716\text{ K}}{24(12)(73)(.75)}$ = 0.046 KSI < 0.126 KSI OK.

FLEXURE: Mu = 1.6 (204 K) (9'-(6.75'/2))(3) = 5508 FT-K

$\frac{5508\text{ FT-K }(12{,}000)}{0.9\ (288)\ (73)\ (73)}$ = 48 PSI

p = 0.0011, use 0.0018
As = (0.0018) (288) (73) = 37.8 in2 (30 #10)

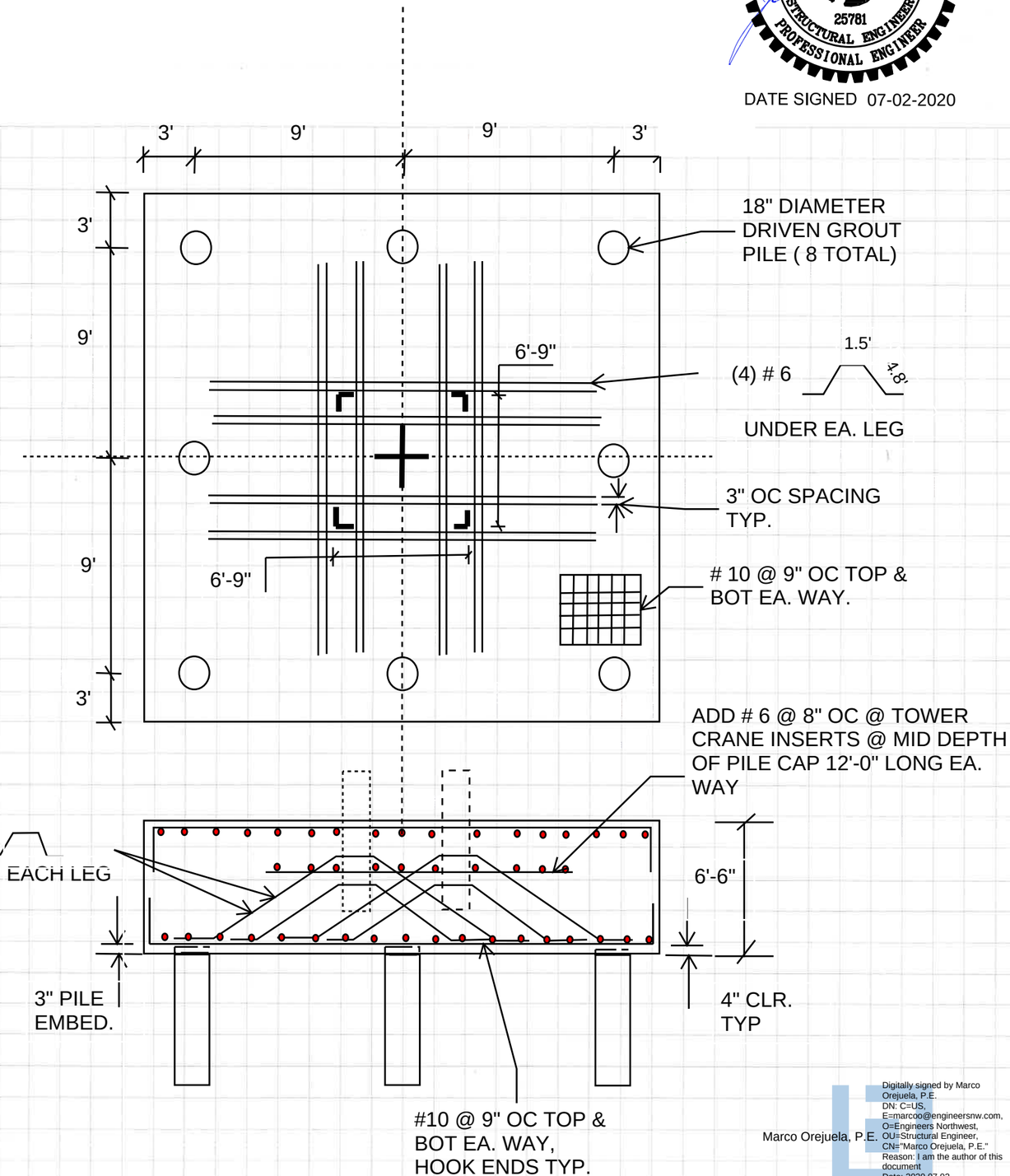

Marco Orejuela, P.E.
Digitally signed by Marco Orejuela, P.E.
DN: C=US, E=marcoo@engineersnw.com, O=Engineers Northwest, OU=Structural Engineer, CN="Marco Orejuela, P.E."
Reason: I am the author of this document
Date: 2020.07.02 07:41:45-07'00'

ENW ENGINEERS NORTHWEST, INC., P.S. ~ STRUCTURAL ENGINEERS
9725 THIRD AVE NE, SUITE 207, SEATTLE, WA 98115 (206) 525~7560 FAX (206) 522~6698

PROJECT # 16038000-6 PROJECT COSTCO CAMPUS BLDG 4 DATE 1-2-2020
SUBJECT TOWER CRANE BASE REACTIONS SHEET 2 OF 6
BY M.O.

LEAVITT CRANES

IN SERVICE PILE REACTIONS

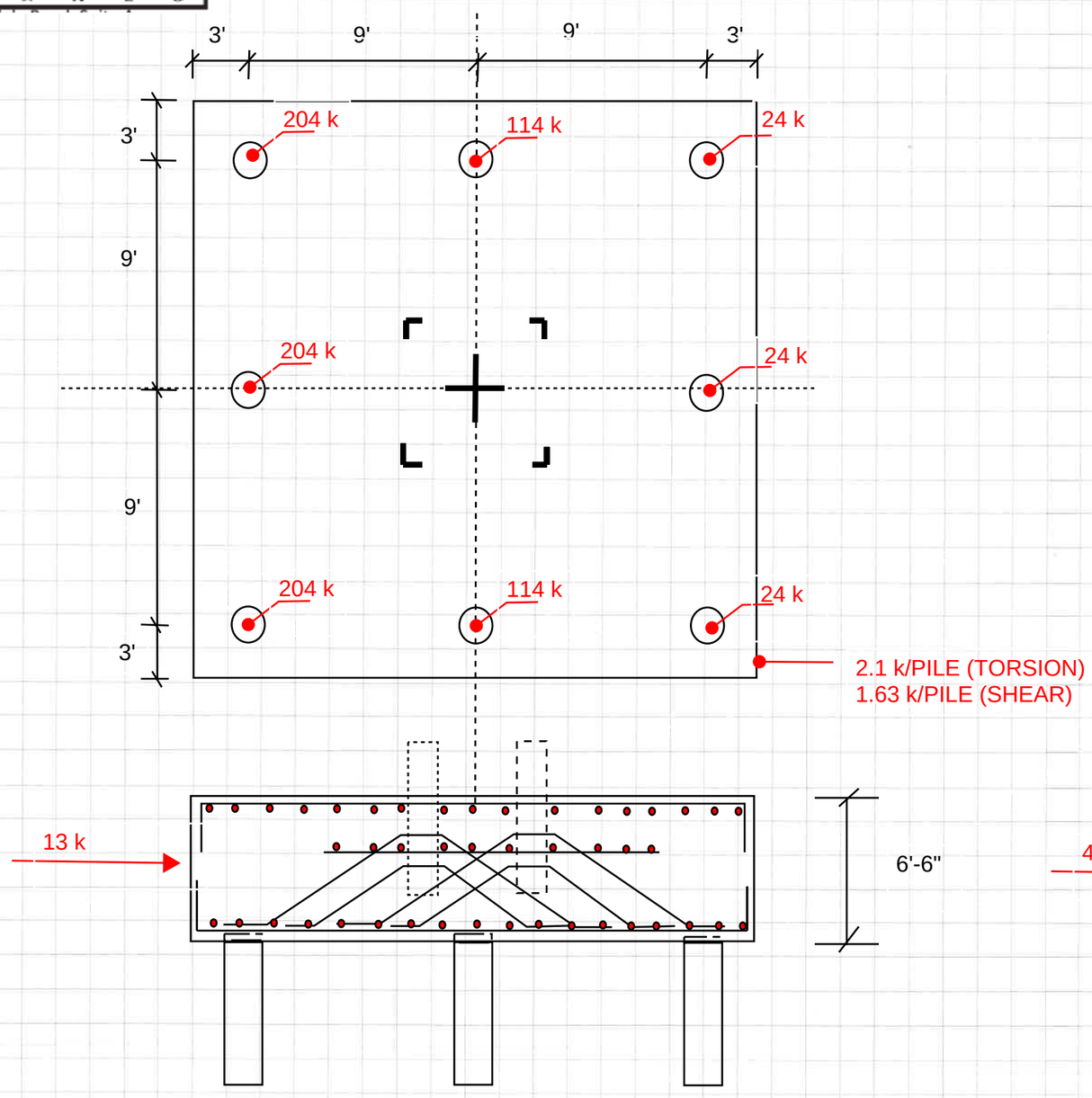

OUT OF SERVICE PILE REACTIONS

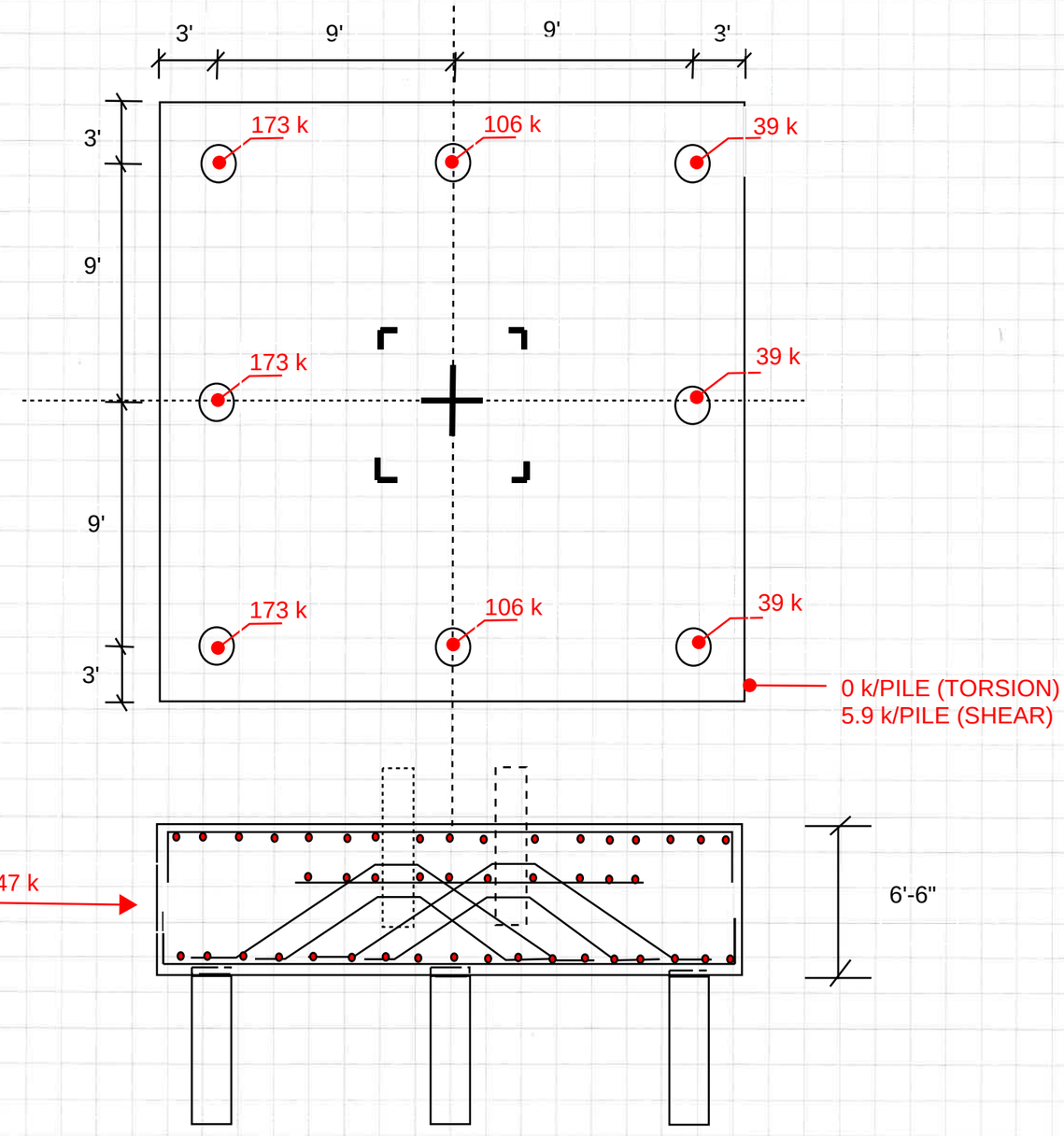

ENW ENGINEERS NORTHWEST, INC., P.S. ~ STRUCTURAL ENGINEERS
9725 THIRD AVE NE, SUITE 207, SEATTLE, WA 98115 (206) 525~7560 FAX (206) 522~6698

PROJECT # 16038000-6 PROJECT COSTCO CAMPUS BLDG 4 DATE 1-2-2020
SUBJECT TOWER CRANE FOUNDATION DESIGN SHEET 3 OF 6
BY M.O.

TEREX

Request Number	R1151-19
Crane	SK 415-20
Jib	50 m
Tower composition	3 x HD23 22.6 + 1 x adapter HD23-TS212 + 9 x TS212.1 + 1 x TSK212.1
Tower height	75,60 m
Base	Foundation anchors
Wind Standard	FEM1005 C25
Site	plane area

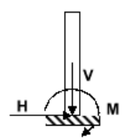

BASE LOADS

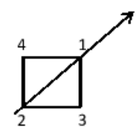

In service

V =	1431,87	kN	321.89 kips
H =	67,45	kN	15.16 kips
M =	8355,71	kNm	6162.33 ft - kips
R1 =	-3240,10	kN	728.4 kips
R2 =	2524,17	kN	567.456 kips
R3 = R4 =	-357,97	kN	80.475 kips
Mtorque =	361,00	kNm	266 ft. kips

Out of service 165 km/h

V =	1163,68	kN	261.6 kips
H =	246,97	kN	55.5 kips
M =	8054,94	kNm	5941 ft - kips
R1 =	-3069,31	kN	690 kips
R2 =	2487,47	kN	559 kips
R3 = R4 =	-290,92	kN	65 kips

Wind from any side 100 km/h

V =	1163,68	kN	261.6 kips
H =	134,79	kN	30.3 kips
M =	8098,97	kNm	5973 ft - kips
R1 =	-2967,08	kN	667 kips
R2 =	2385,24	kN	536 kips

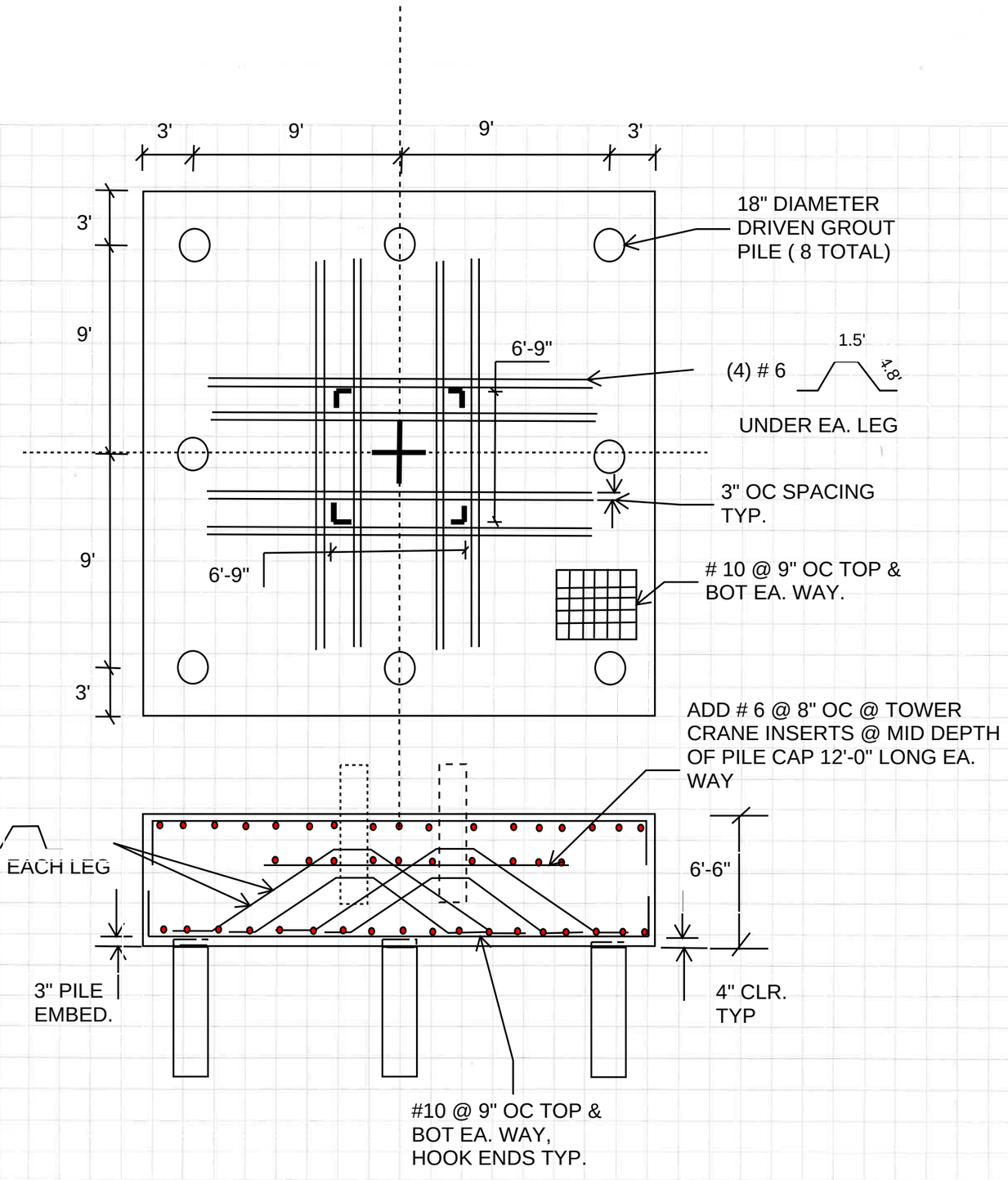

DESIGN ASSUMPTIONS:

Pile Cap Self Weight = 562 K
d = 73"
b = 24' (12) = 288"
f'c = 4 KSI
fy = 60 KSI

18" DIAMETER PILE CAPACITY: 300 KIPS (ASD)

MAX COMPRESSION: $\frac{883\text{ K}}{8} + \frac{6162\text{ FT-K}}{(18/3)}$ = 224K < 300 K (ASD) OK.

PUNCHING SHEAR: 1.6 [(321.9 K / 4) + (6162 FT-K / 6.75' /2)] = 859 K

$\frac{859\text{ K}}{24(12)(73)(.75)}$ = 0.054 KSI < 0.126 KSI OK.

FLEXURE: Mu = 1.6 (224 K) (9'-(6.75'/2))(3) = 6048 FT-K

$\frac{6048\text{ FT-K }(12{,}000)}{0.9\ (288)\ (73)\ (73)}$ = 53 PSI

p = 0.0011, use 0.0018

As = (0.0018) (288) (73) = 37.8 in2 (30 #10)

ENW ENGINEERS NORTHWEST, INC., P.S. ~ STRUCTURAL ENGINEERS
9725 THIRD AVE NE, SUITE 207, SEATTLE, WA 98115 (206) 525~7560 FAX (206) 522~6698

PROJECT # 16038000-6 PROJECT COSTCO CAMPUS BLDG 4 DATE 1-2-2020
SUBJECT TOWER CRANE BASE REACTIONS SHEET 4 OF 6
BY M.O.

TEREX

IN SERVICE PILE REACTIONS

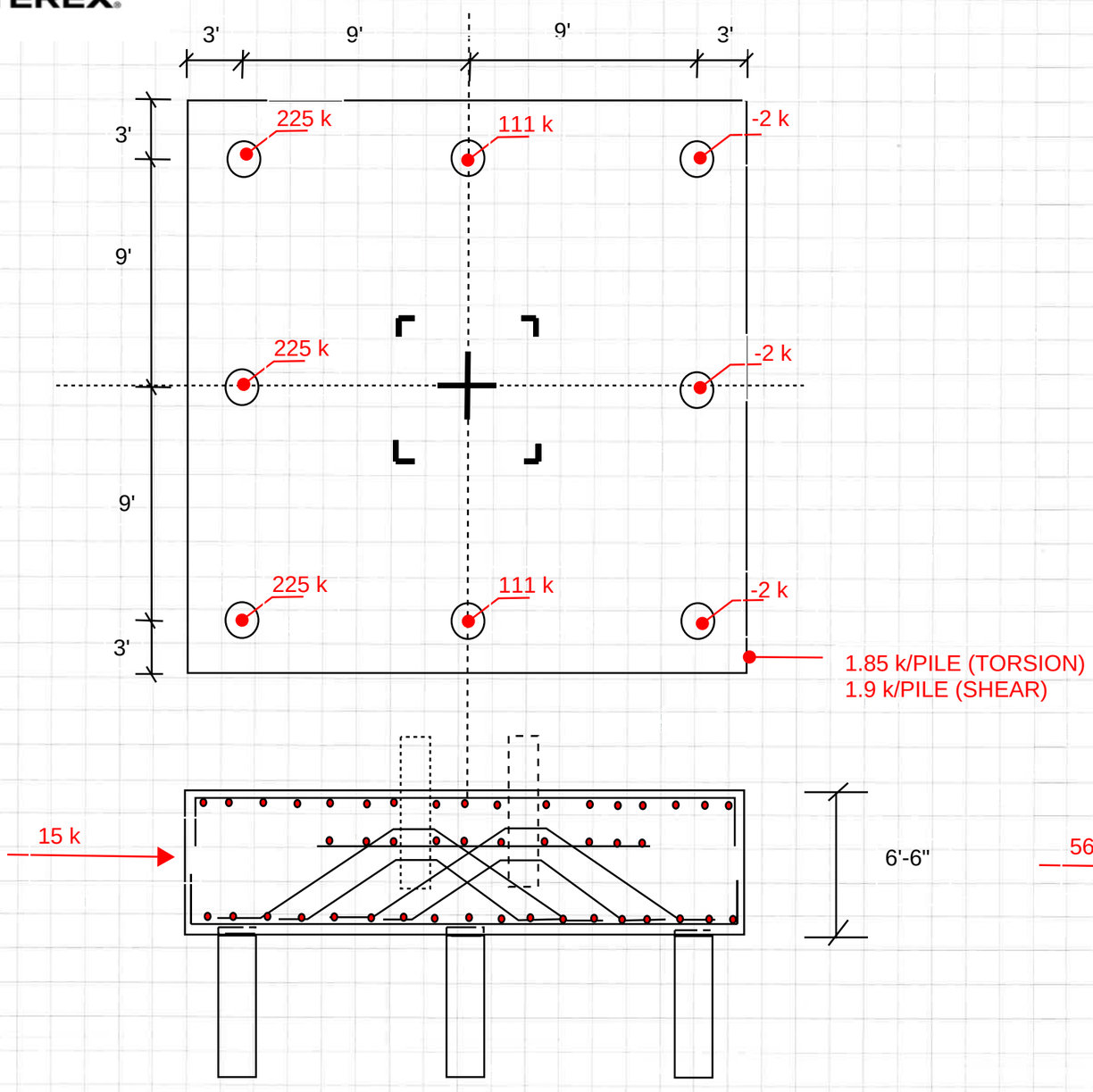

OUT OF SERVICE PILE REACTIONS

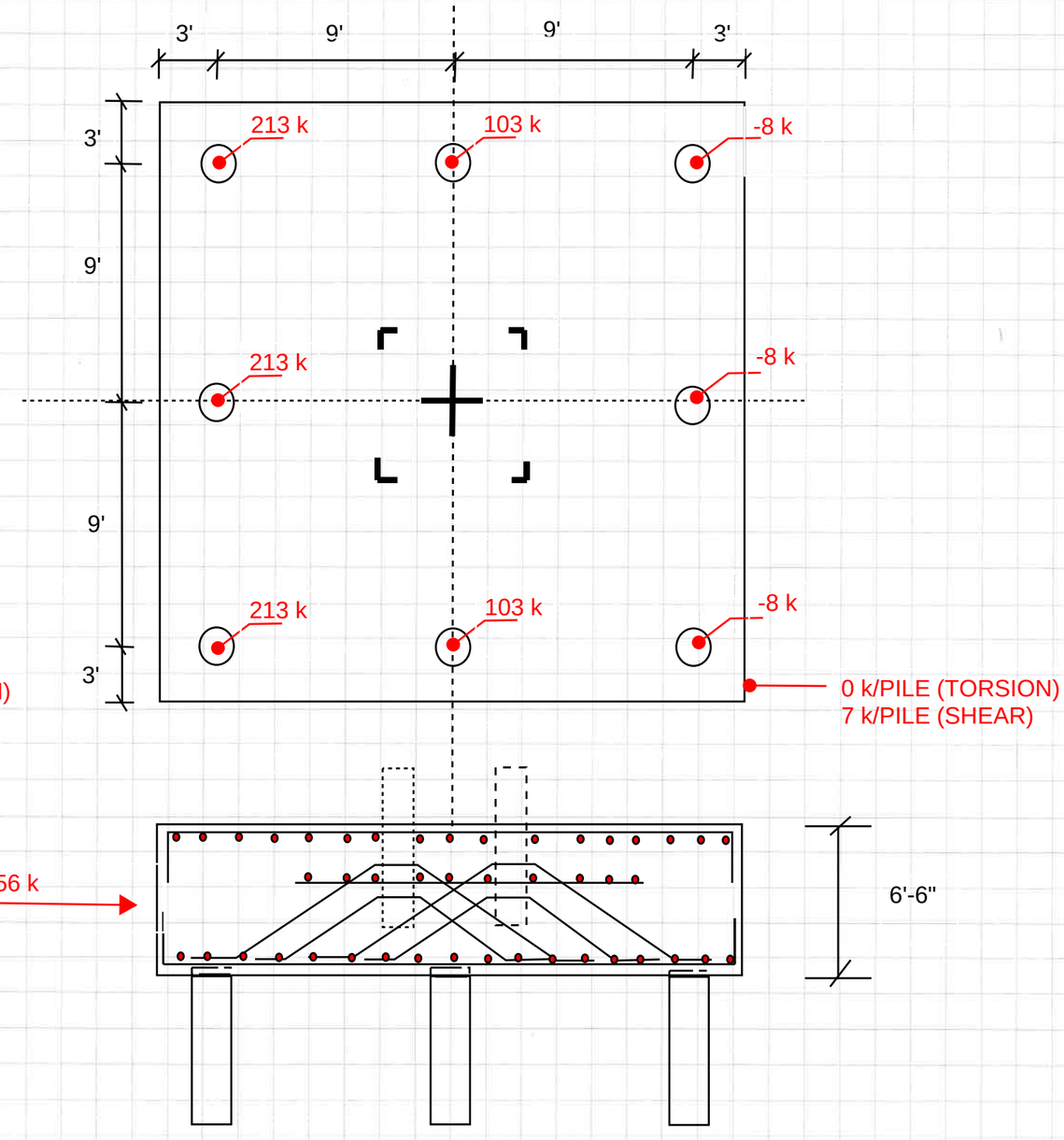

ENW ENGINEERS NORTHWEST, INC., P.S. ~ STRUCTURAL ENGINEERS
9725 THIRD AVE NE, SUITE 207, SEATTLE, WA 98115 (206) 525~7560 FAX (206) 522~6698

PROJECT # 16038000.6 PROJECT COSTCO CAMPUS BLDG 4 DATE 7-2-2020
SUBJECT TOWER CRANE FOUNDATION DESIGN (ALT FOUNDATION @ WEST) SHEET 5 OF 6
BY M.O.

TEREX (TEREX CRANE HAS A HIGHER LOAD DEMAND THAN LEAVITT)

Request Number	**R1151-19**
Crane	**SK 415-20**
Jib	**50** m
Tower composition	**3 x HD23 22.6 + 1 x adapter HD23-TS212 + 9 x TS212.1 + 1 x TSK212.1**
Tower height	**75,60** m
Base	**Foundation anchors**
Wind Standard	**FEM1005 C25**
Site	**plane area**

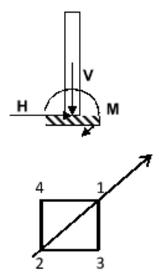

BASE LOADS

In service

V =	**1431,87**	kN	321.89 kips
H =	**67,45**	kN	15.16 kips
M =	**8355,71**	kNm	6162.33 ft - kips
R1 =	**-3240,10**	kN	728.4 kips
R2 =	**2524,17**	kN	567.456 kips
R3 = R4 =	**-357,97**	kN	80.475 kips
Mtorque =	**361,00**	kNm	266 ft. kips

Out of service **165 km/h**

V =	**1163,68**	kN	261.6 kips
H =	**246,97**	kN	55.5 kips
M =	**8054,94**	kNm	5941 ft - kips
R1 =	**-3069,31**	kN	690 kips
R2 =	**2487,47**	kN	559 kips
R3 = R4 =	**-290,92**	kN	65 kips

Wind from any side **100 km/h**

V =	**1163,68**	kN	261.6 kips
H =	**134,79**	kN	30.3 kips
M =	**8098,97**	kNm	5973 ft - kips
R1 =	**-2967,08**	kN	667 kips
R2 =	**2385,24**	kN	536 kips

DESIGN ASSUMPTIONS:

Pile Cap Self Weight = 576 K
d = 91"
b = 20' (12) = 240"
f'c = 4 KSI
fy = 60 KSI

18" DIAMETER PILE CAPACITY: 300 KIPS (ASD)

MAX COMPRESSION: $\frac{898\text{ K}}{8} + \frac{6162\text{ FT-K}}{(14/3)} = 259\text{K} < 300\text{ K (ASD) OK.}$

PUNCHING SHEAR: 1.6 [(321.9 K / 4) + (6162 FT-K / 6.75' /2)] = 859 K

$\frac{859\text{ K}}{20(12)(91)(.75)} = 0.052\text{ KSI} < 0.126\text{ KSI OK.}$

FLEXURE: Mu = 1.6 (257 K) (7'-(6.75'/2))(3) = 4475 FT-K

$\frac{4475\text{ FT-K }(12{,}000)}{0.9\,(240)\,(91)\,(91)} = 30\text{ PSI}$

p = 0.0011, use 0.0018

As = (0.0018) (240) (91) = 39.3 in2 (31 #10)

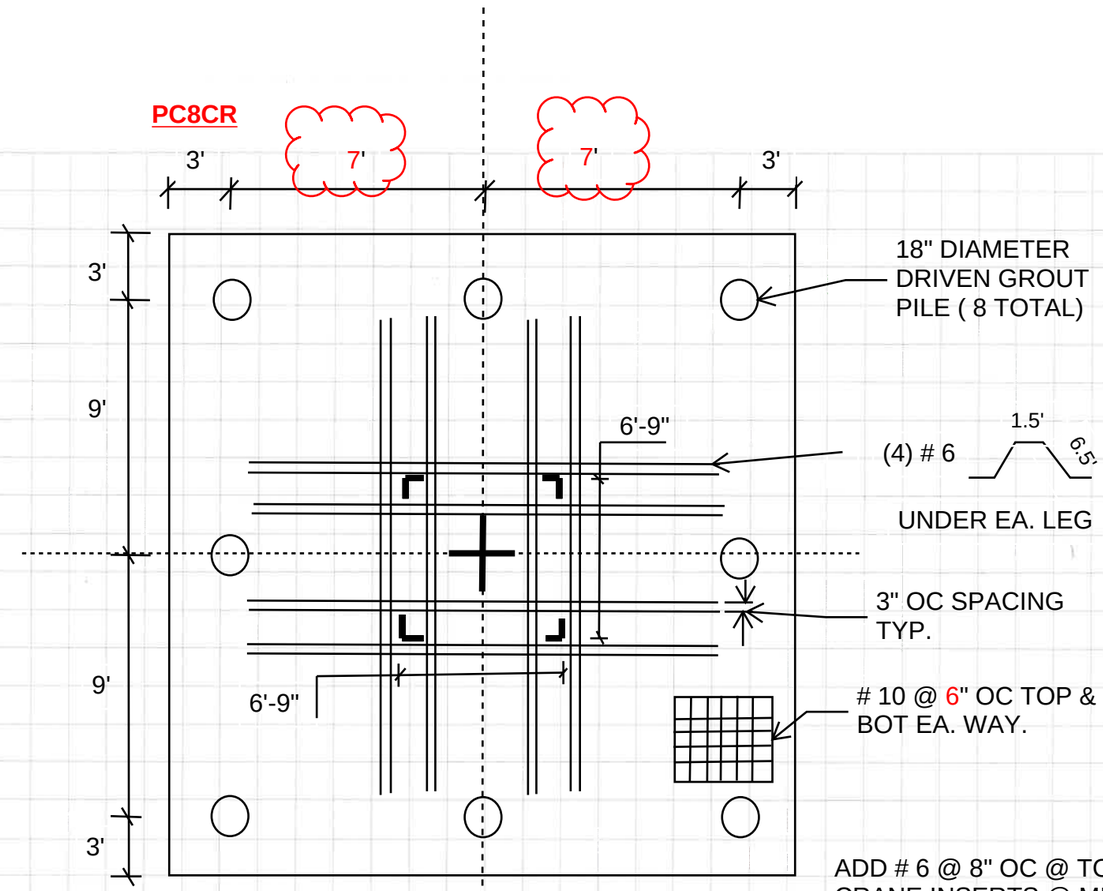

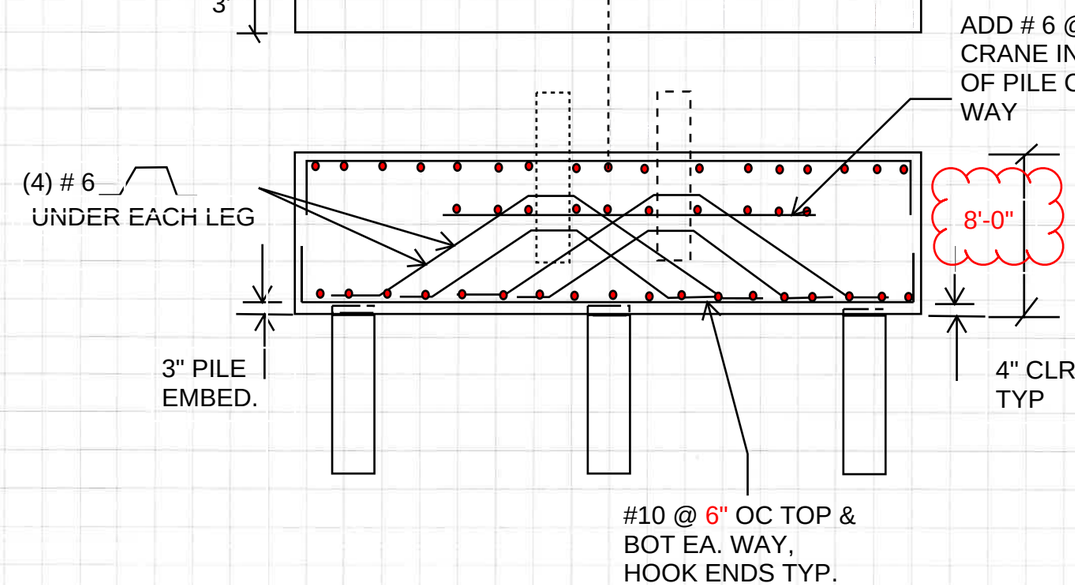

ENW ENGINEERS NORTHWEST, INC., P.S. ~ STRUCTURAL ENGINEERS
9725 THIRD AVE NE, SUITE 207, SEATTLE, WA 98115 (206) 525~7560 FAX (206) 522~6698

PROJECT # 16038000-6 PROJECT COSTCO CAMPUS BLDG 4 DATE 7-2-2020
SUBJECT TOWER CRANE BASE REACTIONS (ALT FOUNDATION @ WEST) SHEET 6 OF 6
BY M.O.

TEREX

IN SERVICE PILE REACTIONS

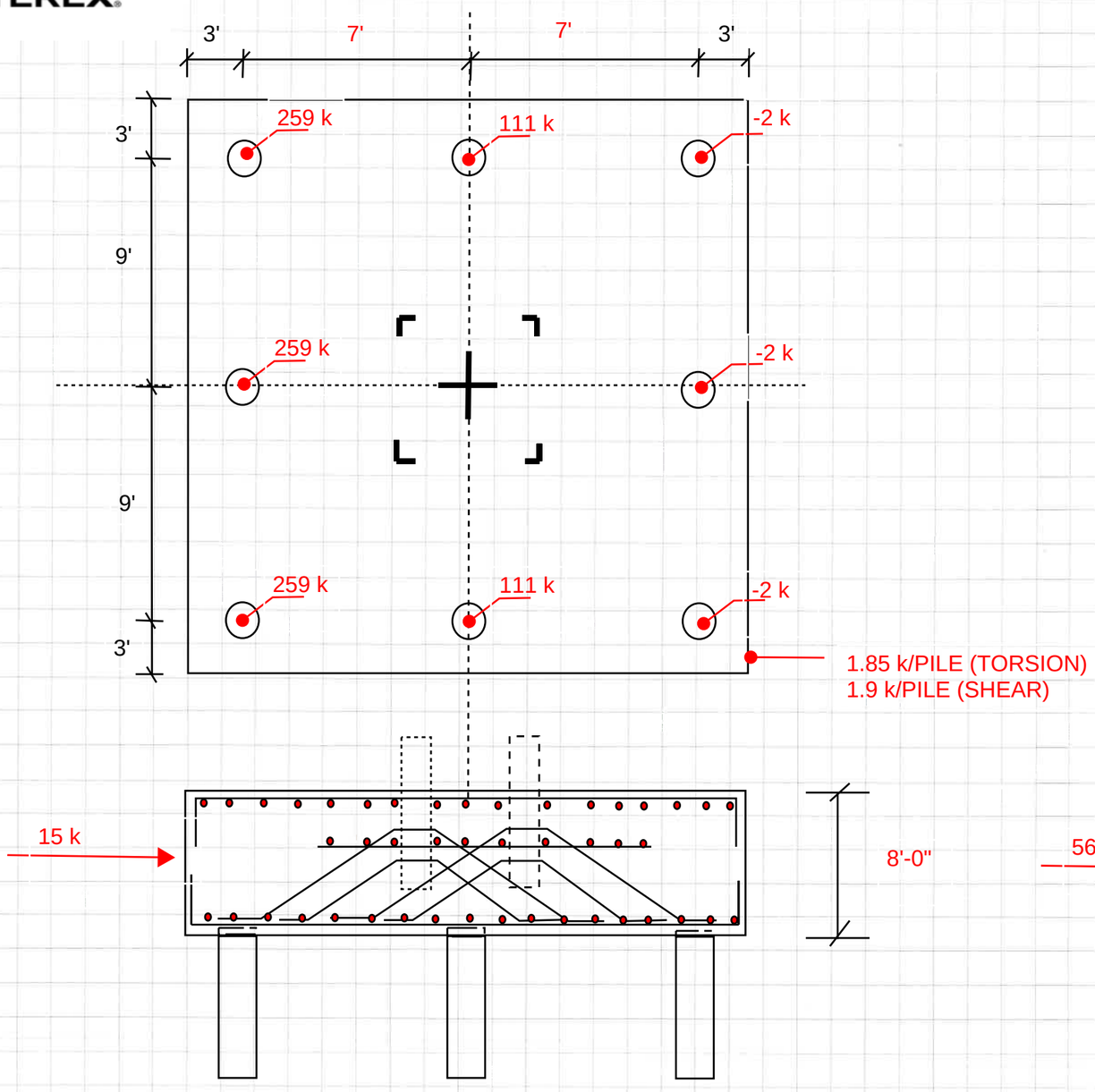

OUT OF SERVICE PILE REACTIONS

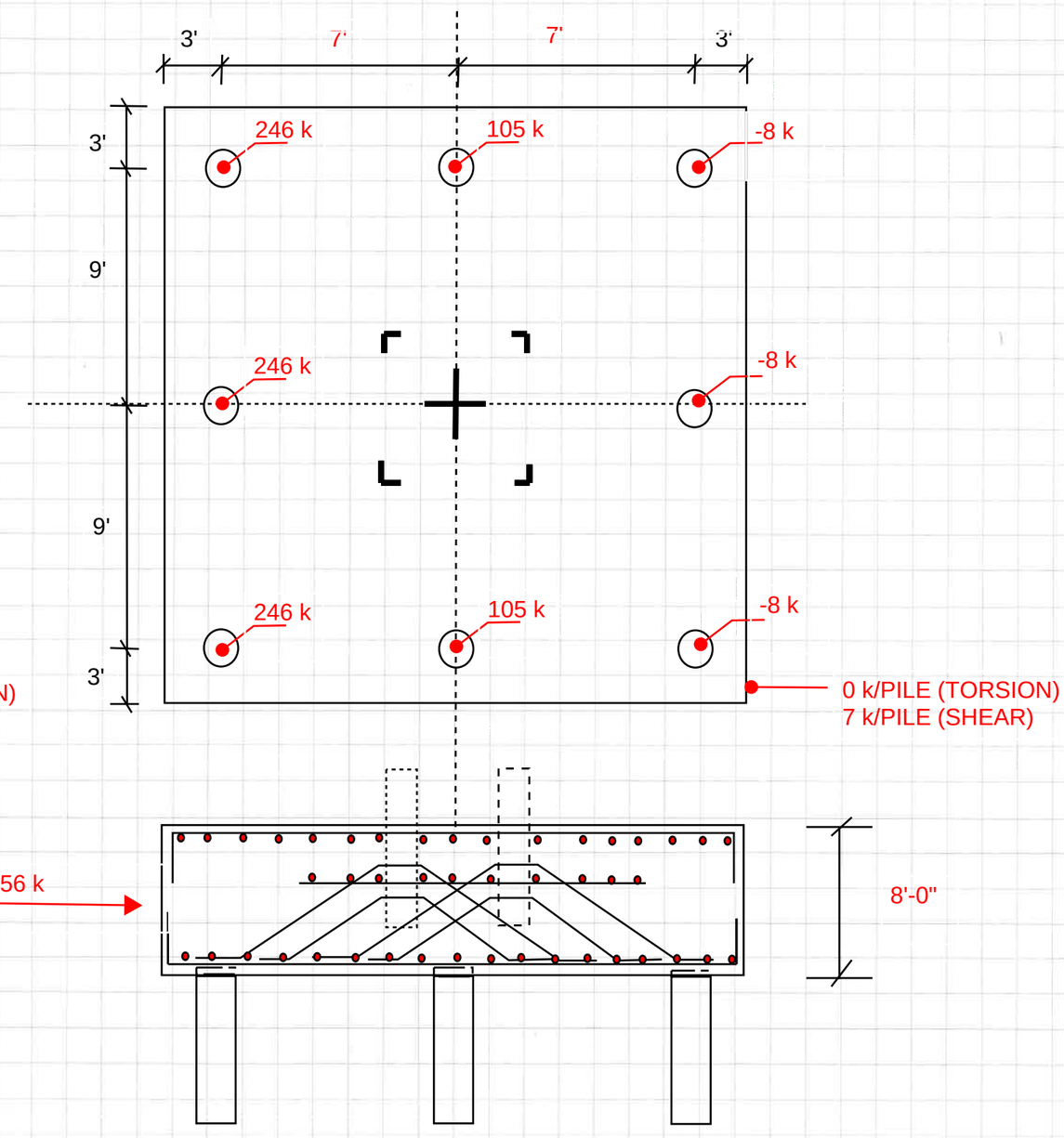

FOR REFERENCE ONLY

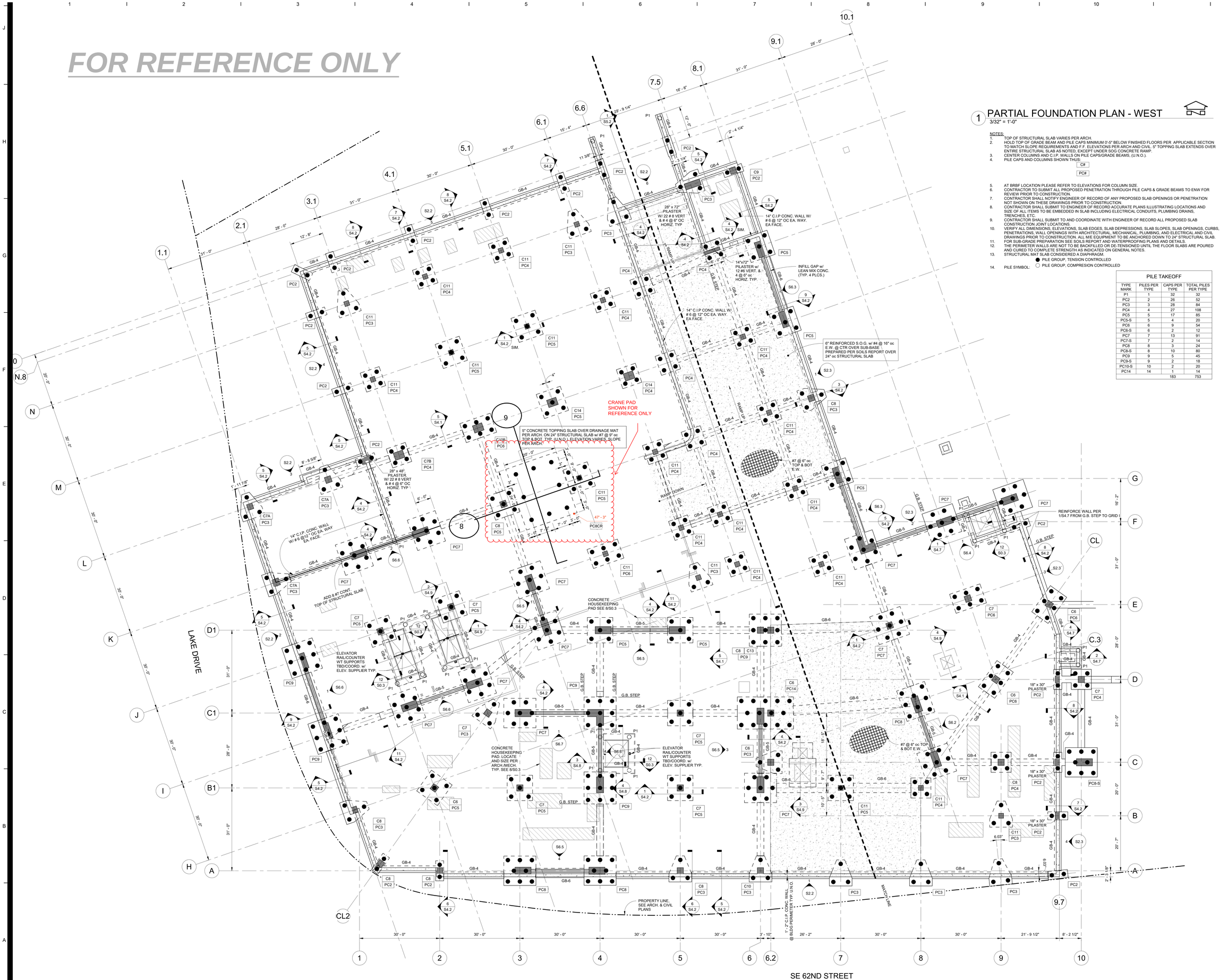

1 PARTIAL FOUNDATION PLAN - WEST

3/32" = 1'-0"

NOTES:

1. TOP OF STRUCTURAL SLAB VARIES PER ARCH.
2. HOLD TOP OF GRADE BEAM AND PILE CAPS MINIMUM 0'-5" BELOW FINISHED FLOORS PER APPLICABLE SECTION TO MATCH SLOPE REQUIREMENTS AND F.F. ELEVATIONS PER ARCH AND CIVIL. 5" TOPPING SLAB EXTENDS OVER ENTIRE STRUCTURAL SLAB AS NOTED, EXCEPT UNDER SOG CONCRETE RAMP.
3. CENTER COLUMNS AND C.I.P. WALLS ON PILE CAPS/GRADE BEAMS, (U.N.O.).
4. PILE CAPS AND COLUMNS SHOWN THUS:

   C#

   PC#

5. AT BRBF LOCATION PLEASE REFER TO ELEVATIONS FOR COLUMN SIZE.
6. CONTRACTOR TO SUBMIT ALL PROPOSED PENETRATION THROUGH PILE CAPS & GRADE BEAMS TO ENW FOR REVIEW PRIOR TO CONSTRUCTION.
7. CONTRACTOR SHALL NOTIFY ENGINEER OF RECORD OF ANY PROPOSED SLAB OPENINGS OR PENETRATION NOT SHOWN ON THESE DRAWINGS PRIOR TO CONSTRUCTION.
8. CONTRACTOR SHALL SUBMIT TO ENGINEER OF RECORD ACCURATE PLANS ILLUSTRATING LOCATIONS AND SIZE OF ALL ITEMS TO BE EMBEDDED IN SLAB INCLUDING ELECTRICAL CONDUITS, PLUMBING DRAINS, TRENCHES, ETC.
9. CONTRACTOR SHALL SUBMIT TO AND COORDINATE WITH ENGINEER OF RECORD ALL PROPOSED SLAB CONSTRUCTION JOINT LOCATIONS.
10. VERIFY ALL DIMENSIONS, ELEVATIONS, SLAB EDGES, SLAB DEPRESSIONS, SLAB SLOPES, SLAB OPENINGS, CURBS, PENETRATIONS, WALL OPENINGS WITH ARCHITECTURAL, MECHANICAL, PLUMBING, AND ELECTRICAL AND CIVIL DRAWINGS PRIOR TO CONSTRUCTION. ALL M/E EQUIPMENT TO BE ANCHORED DOWN TO 24" STRUCTURAL SLAB.
11. FOR SUB-GRADE PREPARATION SEE SOILS REPORT AND WATERPROOFING PLANS AND DETAILS.
12. THE PERIMETER WALLS ARE NOT TO BE BACKFILLED OR DE-TENSIONED UNTIL THE FLOOR SLABS ARE POURED AND CURED TO COMPLETE STRENGTH AS INDICATED ON GENERAL NOTES.
13. STRUCTURAL MAT SLAB CONSIDERED A DIAPHRAGM.
    - ● PILE GROUP, TENSION CONTROLLED
    - ○ PILE GROUP, COMPRESION CONTROLLED
14. PILE SYMBOL:

PILE TAKEOFF

TYPE MARK	PILES PER TYPE	CAPS PER TYPE	TOTAL PILES PER TYPE
P1	1	32	32
PC2	2	26	52
PC3	3	28	84
PC4	4	27	108
PC5	5	17	85
PC5-S	5	4	20
PC6	6	9	54
PC6-S	6	2	12
PC7	7	13	91
PC7-S	7	2	14
PC8	8	3	24
PC8-S	8	10	80
PC9	9	5	45
PC9-S	9	2	18
PC10-S	10	2	20
PC14	14	1	14
		183	753

COSTCO WHOLESALE

999 Lake Dr, Issaquah, WA 98027

ENW STRUCTURAL ENGINEERS
Engineers Northwest Inc., P.S.
9725 Third Ave NE Suite 207 Seattle, WA 98115
Ph: (206)525-7560, Fax: (206)522-6698
www.engineersnw.com

1101 Second Ave, Ste 100
Seattle, WA 98101
206 962 6500
MG2.com

BLDG. 4
CURRENT SET

7.02.20

DATE SIGNED: 12-06-2019

△	DATE	DESCRIPTION
	05.24.19	PERMIT RESUBMITTAL
	07.26.19	BID ADDENDUM "B"
	08.09.19	PERMIT RESUBMITTAL
	08.16.19	BID ADDENDUM "D"
	12.20.19	AS NOTED
	12.30.19	PERMIT RESUBMITTAL
1	03.20.20	PR-01 / IFC
2	04.10.20	PR-02
4	04.24.20	PR-04
N	06.08.20	PERMIT RESUBMITTAL
5	05.01.20	PR-05
6	06.06.20	PR-09
8	07.02.20	PR-11

16038
PM: MARCO OREJUELA
DRAWN BY: L. MARTINEZ
07/26/19

FOUNDATION PLAN - WEST

S1.0W

BIM 360://COST-Costco Campus-15-0035-02/S-16038-BUILDING 4_R18_CENTRAL.rvt
7/2/2020 7:19:51 AM

FOR REFERENCE ONLY

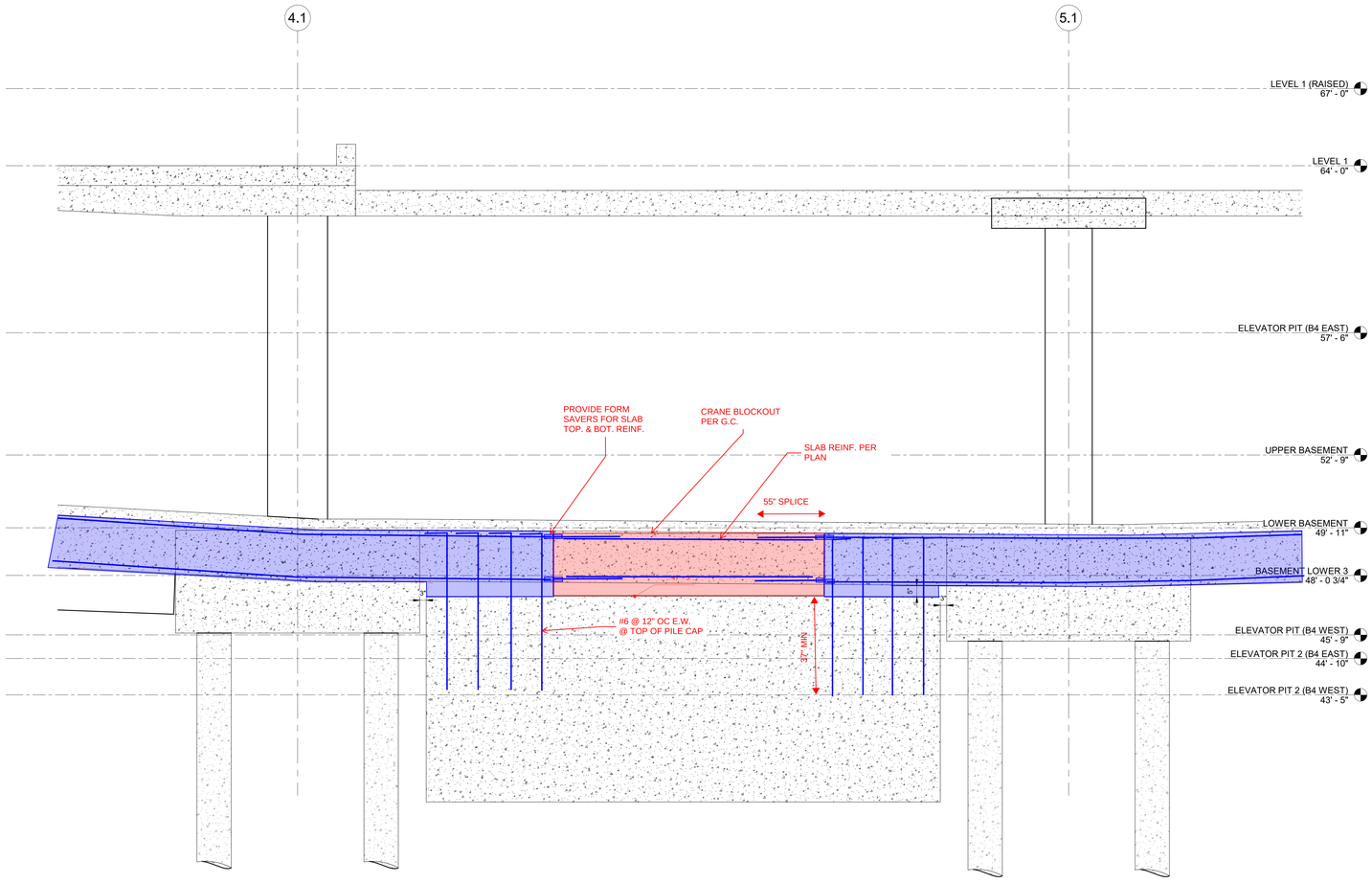

8

FOR REFERENCE ONLY

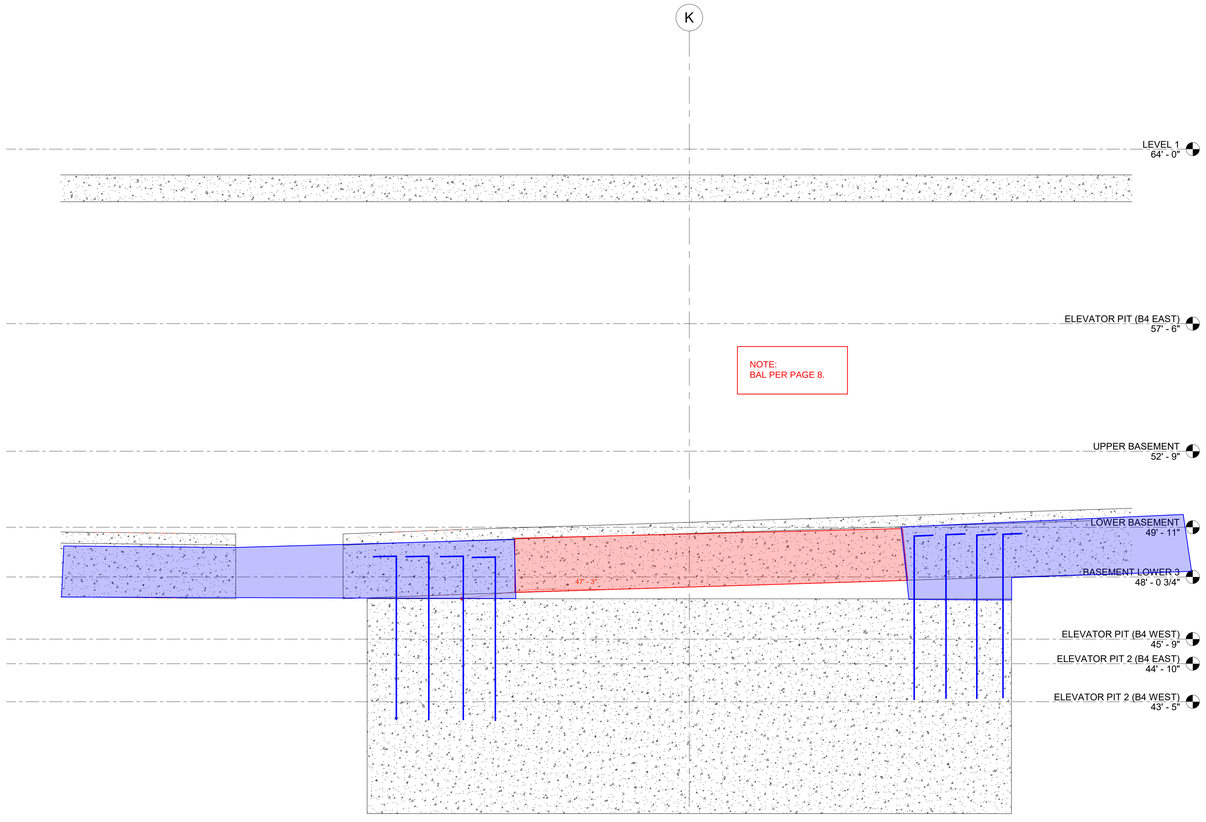

9