SEC. 9, TWP. 24 N., RGE. 6 E., W.M.

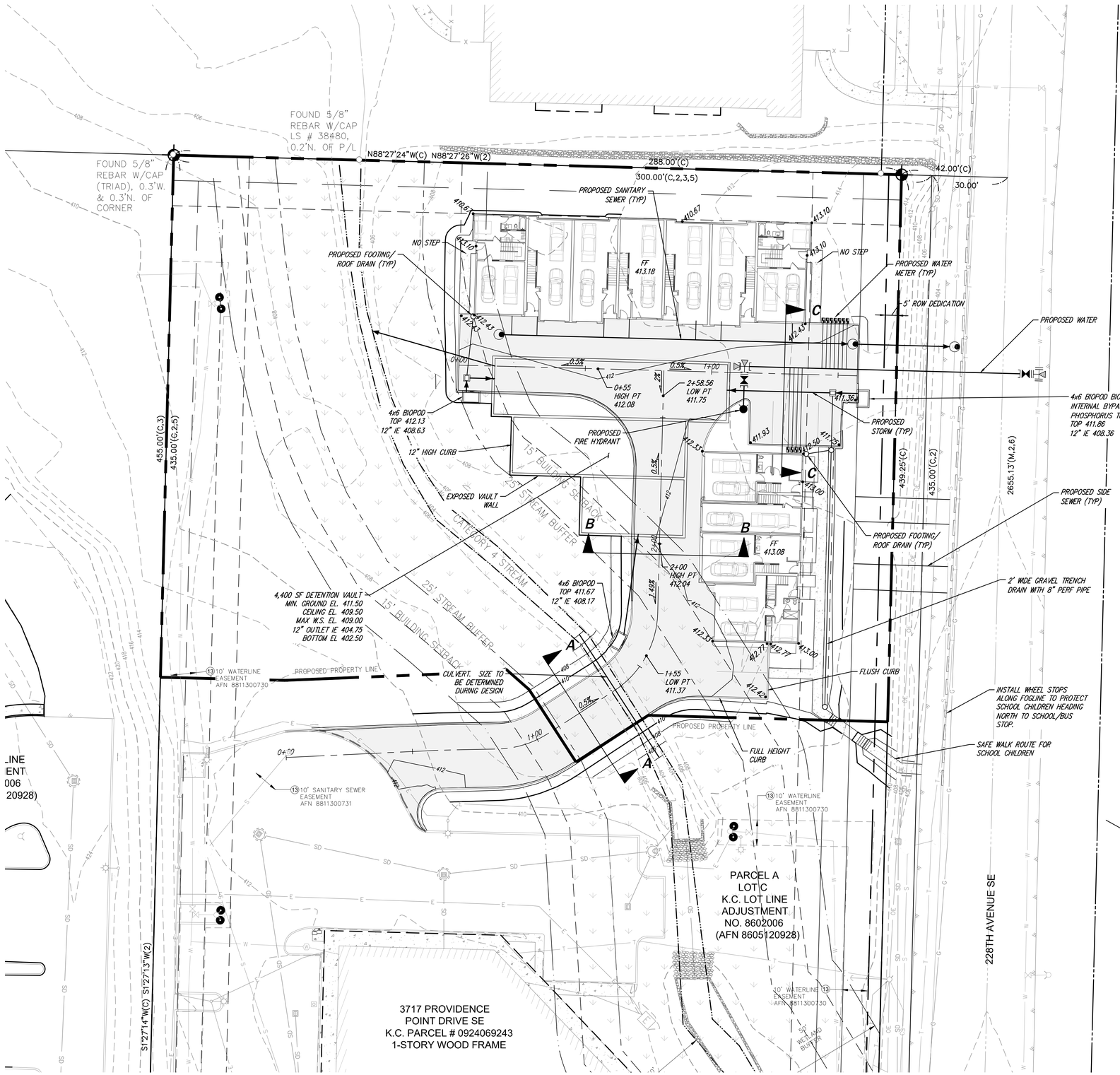

SCALE: 1" = 20'

0 10 20 40

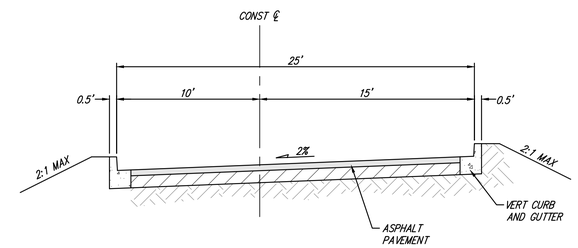

SECTION A-A ACCESS DRIVE

NO SCALE

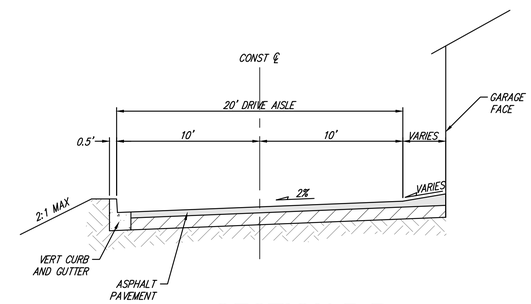

SECTION B-B ACCESS DRIVE

NO SCALE

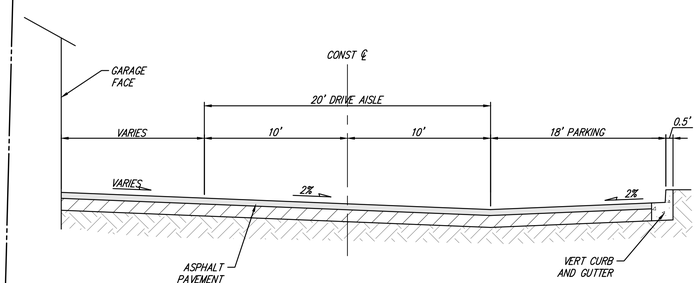

SECTION C-C ACCESS DRIVE

NO SCALE

NO.	REVISIONS	DATE

CORE DESIGN
CIVIL ENGINEERING
LANDSCAPE ARCHITECTURE
PLANNING
SURVEYING
12100 NE 195th St, Suite 300 Bothell, Washington 98011 425.885.7877

CONCEPTUAL GRADING AND UTILITY PLAN
SAMMAMISH WOODS TOWNHOMES

FIRST SAMMAMISH WOODS ASSOCIATES, LLC
930 S 336TH STREET, SUITE B
FEDERAL WAY, WA 98198

DATE	MAY 2019	
DESIGNED	GINA BROOKS	
DRAWN	DAVID VAUGHN	
APPROVED	GINA BROOKS	
	GINA BROOKS	PROJECT MANAGER

SHEET	OF
1	1

PROJECT NUMBER 18266

6/20/2019 1:32 PM J:\2018\18266\ENGINEERING\PRELIMINARY\SHEETS\18266 CONCEPTUAL GRADING AND UTILITIES.DWG