PRJ19-00008 Attachment 069

Corporate: 100 1st Ave West · PO Box 808 · Oskaloosa, IA 52577 · 641/673-0411 · 800/825-6020 · Fax: 641/673-4740
Manufacturing: 2107 Stewart Road · PO Box 260 · Muscatine, IA 52761 · 563/263-2281 · 800/756-1205 · Fax: 800/374-6402
Web: www.musco.com · **Email:** lighting@musco.com

November 12th, 2021

To: Tom Mullins

RE: Issaquah High School #4

This letter is regarding the athletic field lighting proposed for the new Issaquah High School. We have completed a revised layout of the lighting system that reflects the site perimeter property lines, which also incorporates the site topography.

We were able to limit the average horizontal footcandles along the property lines to less than 1.0 footcandles by using the appropriate pole heights, pole locations and luminaire aiming "Exhibit A". Our target light levels on the playing surface were based on IESNA Class II recommendations, which is an average of 50 footcandles on the football field playing surface and no areas of play that exceed a 2.0:1 uniformity "Exhibit B". It is important to point out that while our goal was to reduce the spill light as much as possible, we also needed to provide safe, playable light levels and uniformities over the entire playing surface.

The lighting system utilizes fully shielded LED luminaires (TLC – LED 1500, 1200) with extended visors to ensure there will be no point off the site where the light source (fixture glare) will be visible "Exhibits C & D". Also attached is an "Evolution of Light" Brochure that helps illustrate the lighting control capabilities of the TLC – LED luminaires, compared older HID technology "Exhibit E". In addition, each light pole will have a single full cutoff LED area/security light, mounted 30' above grade and will be used for egress, cleanup and nighttime security "Exhibit F".

The poles heights (80' & 90') are a direct reflection of the pole locations, relative to the furthest aiming point. The luminaires perform best when aimed between 21 and 27 degrees and therefore the proposed pole heights, along with the appropriate luminaire aiming produce the most environmentally friendly solution. Attached is a pole height illustration, "Exhibit G".

The lighting control system has the ability to schedule the field lights, with predetermined on/off times to ensure the lights are only on during scheduled events. Attached is a brochure, which details the control systems capabilities "Exhibit H". Note that the area/security lighting will also be controlled/scheduled using the lighting control system.

It is our opinion that system provides a combination of both a safe, playable athletic field and an energy efficient environmentally friendly lighting solution.

Sincerely

Tim Butz, Musco Sports Lighting
503-720-6625

PRJ19-00008 Attachment 069

Issaquah High School #4

Lighting Project
Issaquah, WA
November 12, 2021

Project #194692

Submitted by:
Musco Sports Lighting, LLC

Attn: Alli Costello
2107 Stewart Road
Muscatine, Iowa 52761

Toll Free: 800-756-1205
Fax: 800-374-6402

We Make It Happen.

This information Is provided by Musco exclusively For this project. Reproduction or distribution of the enclosed documents or information withough the written permission of Musco Sports Lighting, LLC is prohibited. M-1164-enUS-5

A. EXHIBIT A

PRJ19-00008 Attachment 069

Issaquah High School

Issaquah,WA

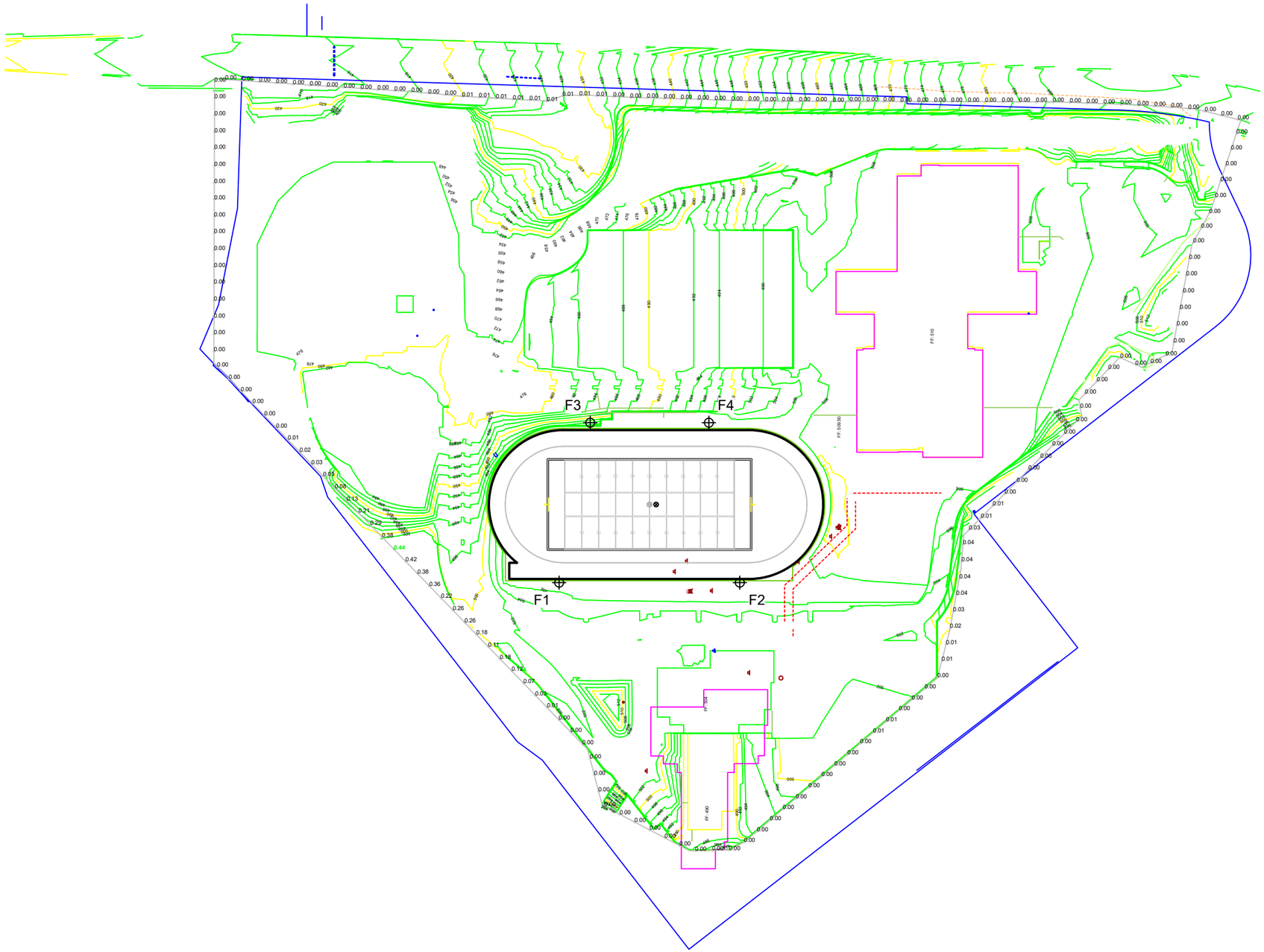

GRID SUMMARY

Name:	**Topographic Spill Line**
Spacing:	30.0'
Height:	-93.0' above grade

ILLUMINATION SUMMARY

HORIZONTAL FOOTCANDLES	
	Entire Grid
Scan Average:	0.0263
Maximum:	0.44
Minimum:	0.00
No. of Points:	178
LUMINAIRE INFORMATION	
Applied Circuits:	A, B, C
No. of Luminaires:	**44**
Total Load:	55.82 kW

Guaranteed Performance: The ILLUMINATION described above is guaranteed per your Musco Warranty document.

Field Measurements: Individual field measurements may vary from computer-calculated predictions and should be taken in accordance with IESNA RP-6-15.

Electrical System Requirements: Refer to Amperage Draw Chart and/or the **"Musco Control System Summary"** for electrical sizing.

Installation Requirements: Results assume ± 3% nominal voltage at line side of the driver and structures located within 3 feet (1m) of design locations.

SCALE IN FEET 1 : 200

0' 200' 400'

Pole location(s) ⊕ dimensions are relative to 0,0 reference point(s) ⊗

ENGINEERED DESIGN By: Bryce Miles · File #194692I - FB Only · 12-Nov-21

We Make It Happen.

Not to be reproduced in whole or part without the written consent of Musco Sports Lighting, LLC. ©1981, 2021 Musco Sports Lighting, LLC.

B. EXHIBIT B

PRJ19-00008 Attachment 069

Issaquah High School

Issaquah,WA

EQUIPMENT LIST FOR AREAS SHOWN

Pole				Luminaires				
QTY	LOCATION	SIZE	GRADE ELEVATION	MOUNTING HEIGHT	LUMINAIRE TYPE	QTY / POLE	THIS GRID	OTHER GRIDS
1	F1	80'	-	80'	TLC-LED-1500	9	9	0
				15'	TLC-BT-575	2	2	0
				80'	TLC-LED-1200	1	1	0
1	F2	80'	-	15'	TLC-BT-575	2	2	0
				80'	TLC-LED-1500	10	10	0
1	F3	90'	-12'	3'	TLC-BT-575	2	2	0
				78'	TLC-LED-1500	8	8	0
1	F4	80'	-	15'	TLC-BT-575	2	2	0
				80'	TLC-LED-1500	8	8	0
4	TOTALS					44	44	0

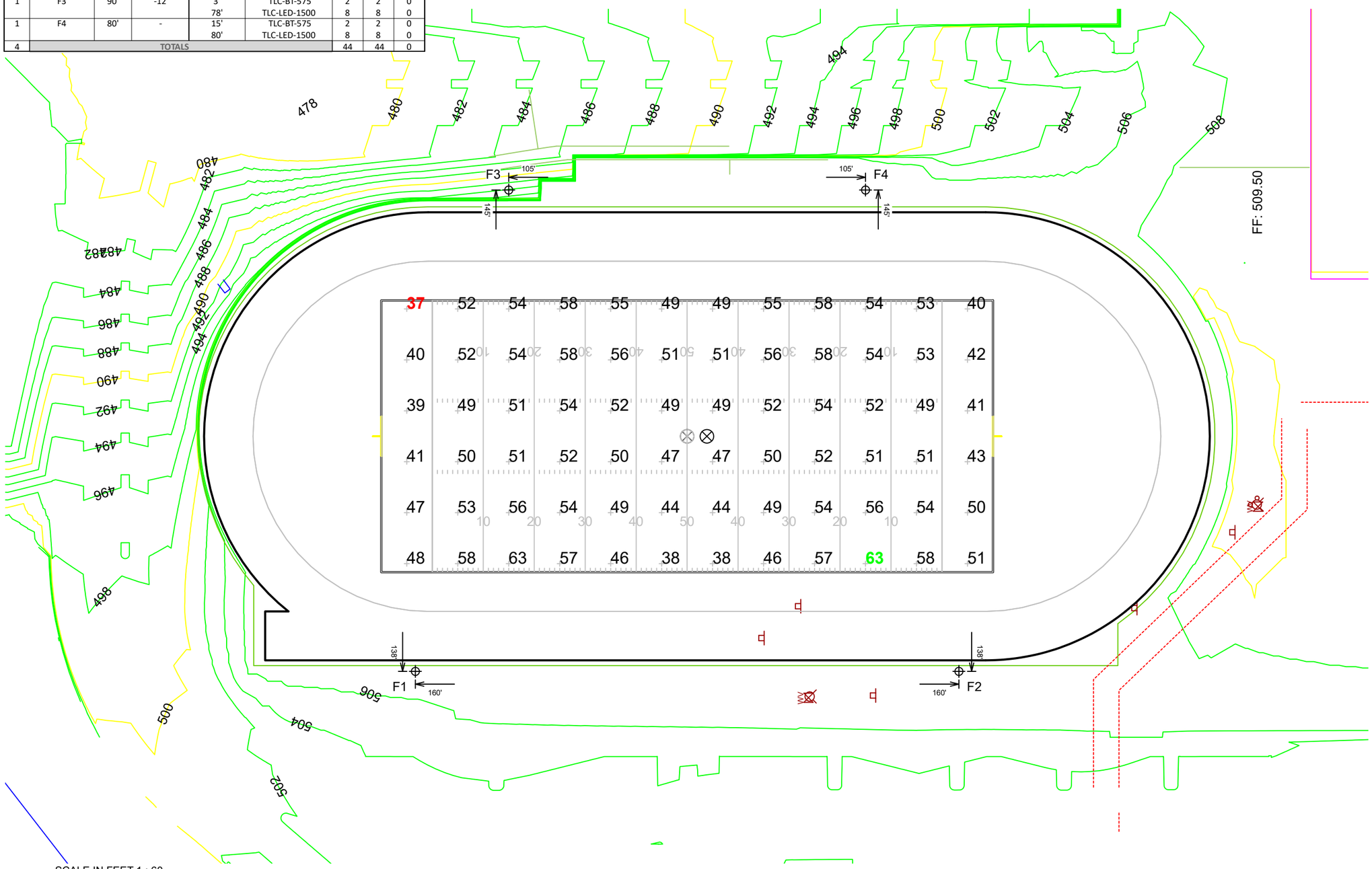

GRID SUMMARY

Name:	**Football**
Size:	360' x 160'
Spacing:	30.0' x 30.0'
Height:	3.0' above grade

ILLUMINATION SUMMARY

MAINTAINED HORIZONTAL FOOTCANDLES	
	Entire Grid
Guaranteed Average:	**50**
Scan Average:	50.74
Maximum:	63
Minimum:	37
Avg / Min:	1.37
Guaranteed Max / Min:	**2**
Max / Min:	1.69
UG (adjacent pts):	1.39
CU:	0.55
No. of Points:	72
LUMINAIRE INFORMATION	
Applied Circuits:	A
No. of Luminaires:	**44**
Total Load:	55.82 kW

Guaranteed Performance: The ILLUMINATION described above is guaranteed per your Musco Warranty document and includes a 0.95 dirt depreciation factor.

Field Measurements: Individual field measurements may vary from computer-calculated predictions and should be taken in accordance with IESNA RP-6-15.

Electrical System Requirements: Refer to Amperage Draw Chart and/or the **"Musco Control System Summary"** for electrical sizing.

Installation Requirements: Results assume ± 3% nominal voltage at line side of the driver and structures located within 3 feet (1m) of design locations.

Pole location(s) ⊕ dimensions are relative to 0,0 reference point(s) ⊗

We Make It Happen.

Not to be reproduced in whole or part without the written consent of Musco Sports Lighting, LLC. ©1981, 2021 Musco Sports Lighting, LLC.

ENGINEERED DESIGN By: Bryce Miles · File #194692I - FB Only · 12-Nov-21

C. EXHIBIT C

Total Light Control™ – TLC-LED-1500 Luminaire

PRJ19-00008 Attachment 069

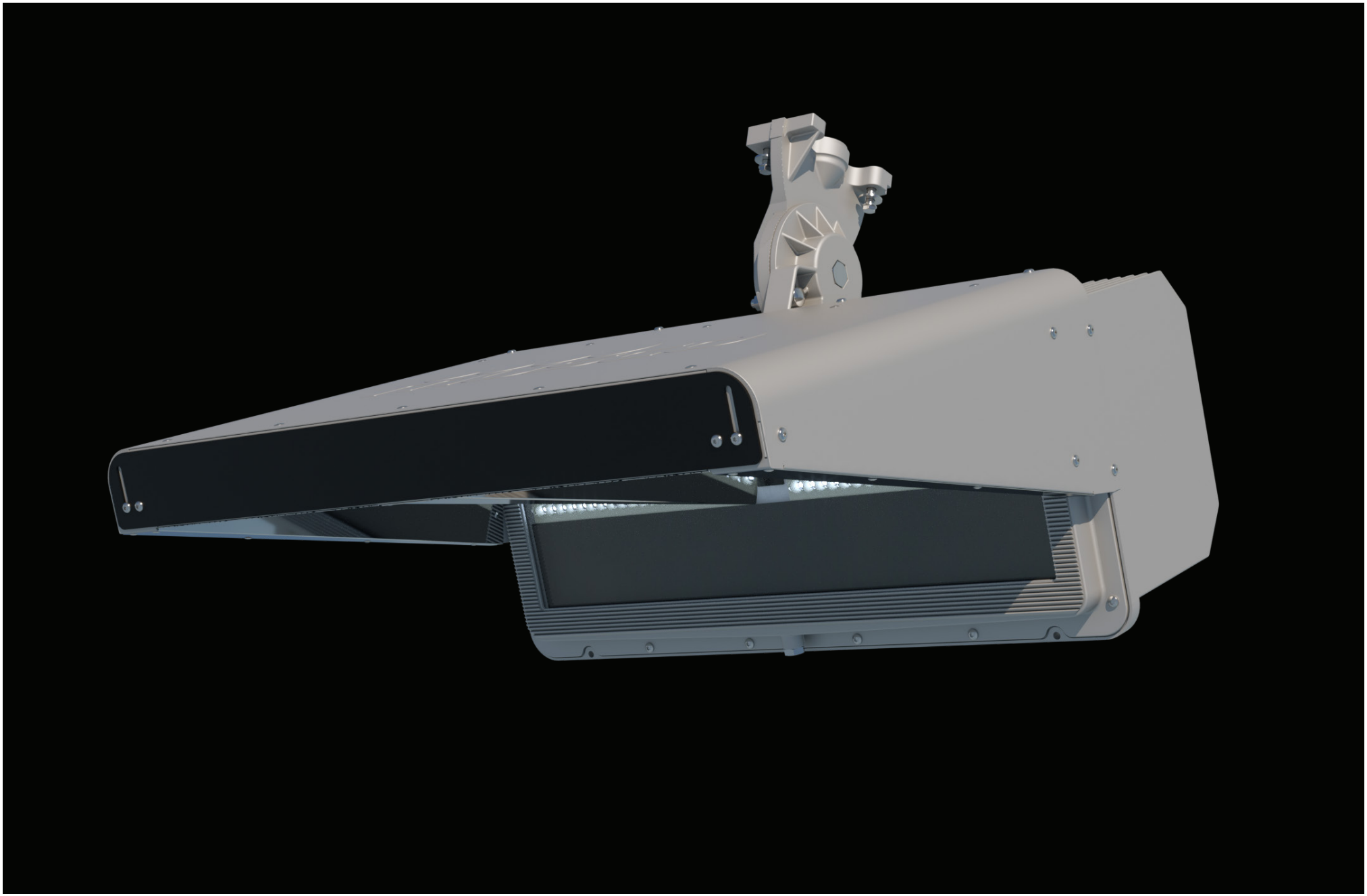

©2019 Musco Sports Lighting, LLC · U.S. and foreign patents issued and pending · M-3047-en04-1

D. EXHIBIT D

Total Light Control™ – TLC-LED-1200 Luminaire

PRJ19-00008 Attachment 069

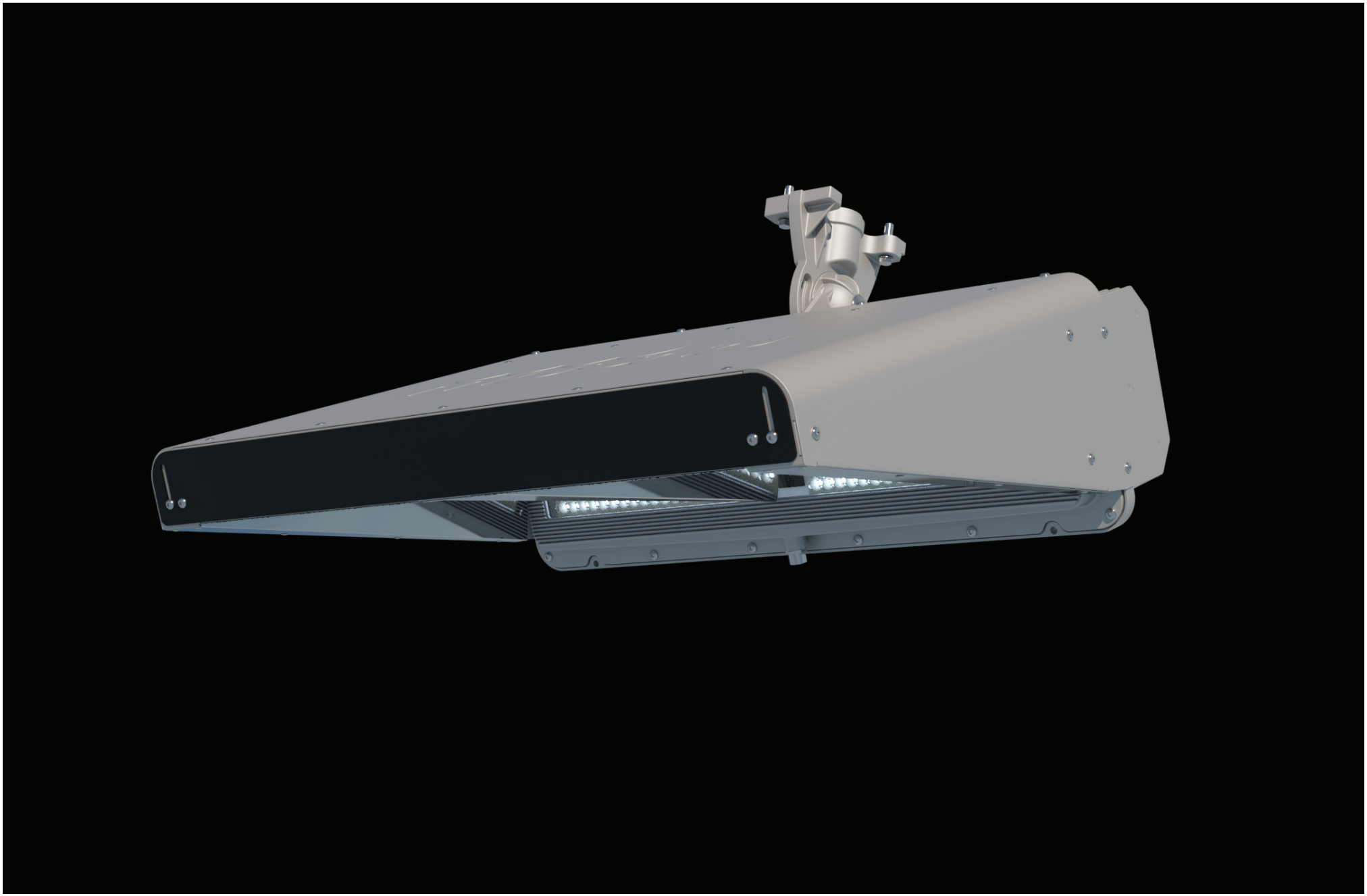

©2019 Musco Sports Lighting, LLC · U.S. and foreign patents issued and pending · M-3046-en04-1

E. EXHIBIT E

What Matters in Lighting Technology

Light Control

Photographed at 100 ft (30 m) from field edge

Used equal parameters for:

- On-field light level per pole
- Wattage per luminaire
- Mounting height
- Luminaire aiming angles
- Pole distance from aiming point

©2015, 2017 Musco Sports Lighting, LLC · M-1905-en04-4

F. EXHIBIT F

PRJ19-00008 Attachment 069

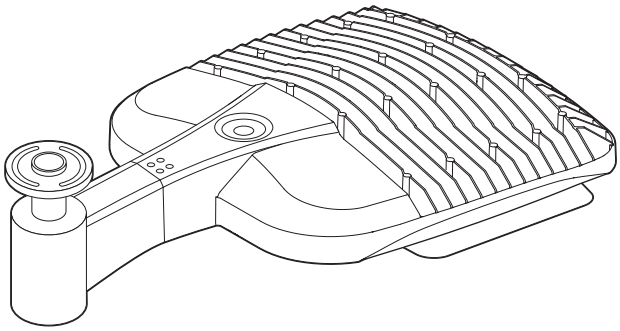

Luminaire Data

Manufacturer ..... Cree, Inc.

Material and finish ..... Die-cast aluminum with silver powder-coat finish[1]

Weight (luminaire) ..... 26.5 lb (12 kg)

Regulatory and Voluntary Qualifications

UL ..... cULus Listed

Environment ..... Suitable for wet locations

Ingress Protection IP66

Emissions ..... Meets FCC Part 15, Subpart B, Class A standards for conducted and radiated emmissions

RoHS ..... Compliant

Photometric Characteristics

Lumen maintenance factor[2]

- 25k hours[3] 0.96
- 50k hours[3] 0.92
- 75k hours[3] 0.88
- 100k hours[4] 0.84

CIE correlated color temperature ..... 5700 K

Color Rendering Index (CRI), minimum 70

Lumens 17,000

Footnotes:

1) Cree's exclusive Colorfast DeltaGuard® finish freatures an E-coat epoxy primer with an ultra-durable powder topcoat, providing excellent resistance to corrosion, ultraviolet degradation, and abrasion.

2) Lumen maintenance values at 25˚C ambient temperature are calculated per TM-21 based on LM-80 data and in-situ luminaire testing.

3) Values are represented as projected values within six times limit of tested hours per IES TM-21-11.

4) Values are represented as calculated values due to exceeding six times limit of tested hours.

PRJ19-00008 Attachment 069

Electrical Data

Rated wattage per luminaire[1] ..... 130 W

Input voltage .....120 – 277 V or 347 – 480 V, 50/60 Hz

Driver configuration .....Integral

Driver Efficiency .....>90%

Starting (inrush) current..... 73 A, 120 µs

Power factor .....>0.9

Total Harmonic Distortion .....<20%

Operating temperature range .... -40˚C – +35˚C (-40˚F – +95˚F)

Dimming mode[2] ..... 0 – 10 V dimming to 10%

Typical Wiring

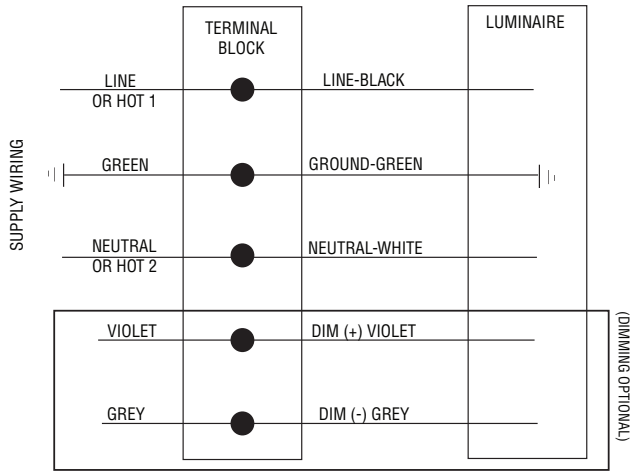

	120 Vac	208 Vac	240 Vac	277 Vac	347 Vac	480 Vac
Max operating current[3]	1.09 A	0.65 A	0.56 A	0.49 A	0.38 A	0.28 A

Footnotes:

1) Rated wattage is the power consumption, including driver efficiency losses, at stabilized operation in 25˚C ambient temperature environment.

2) Dimming controls not provided by Musco. Driver provides 10V source current at 0.15 mA, compliant with IEC 60929 Annex E dimming standard.

3) Operating current based on 25˚C.

Notes

1. Use thermal magnetic HID-rated or D-curve circuit breakers.

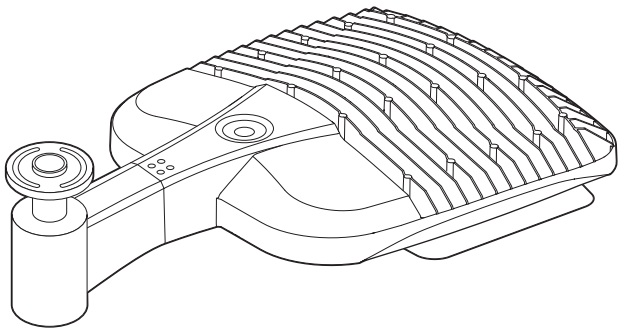

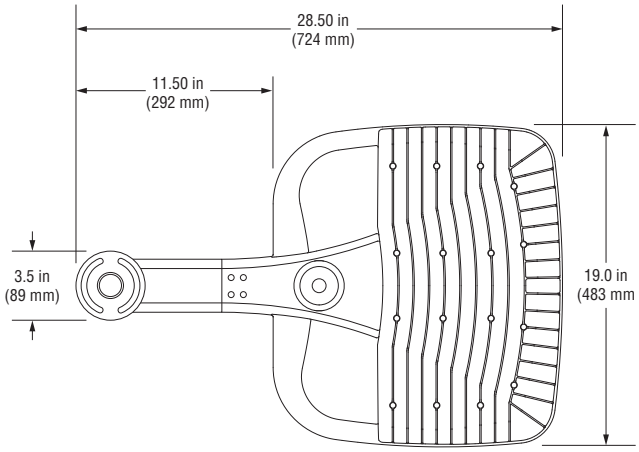

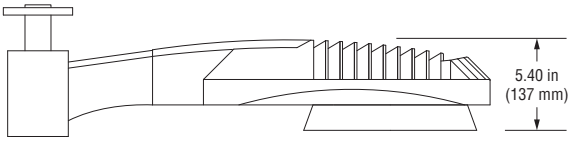

G. EXHIBIT G

PRJ19-00008 Attachment 069

Pole height impacts aiming angles and the amount of spill light

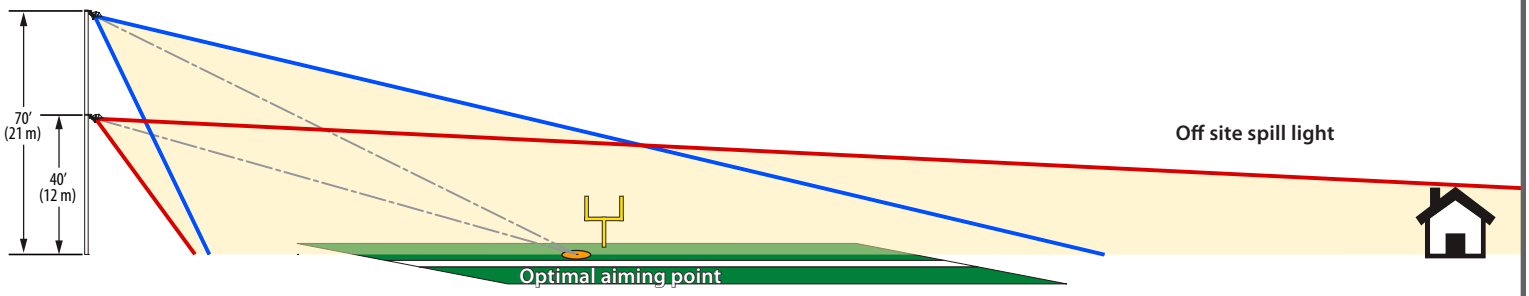

Distance from the aiming point determines optimal pole height

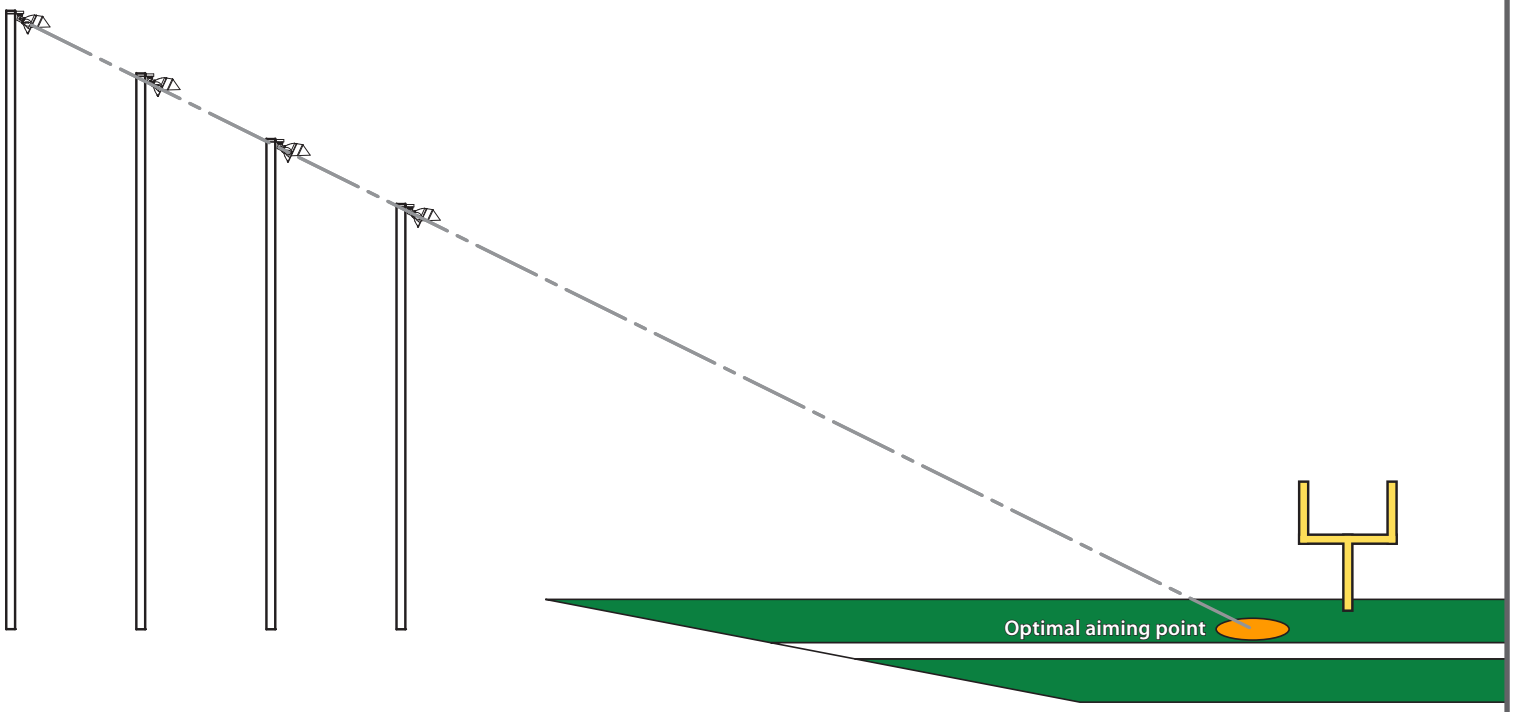

©2015 Musco Sports Lighting, LLC · M-1886-enUS-2

H. EXHIBIT H

PRJ19-00008 Attachment 069

Another Musco Innovation

Control•Link®

Flexible control and solid management of your facility — saves operating cost and improves service

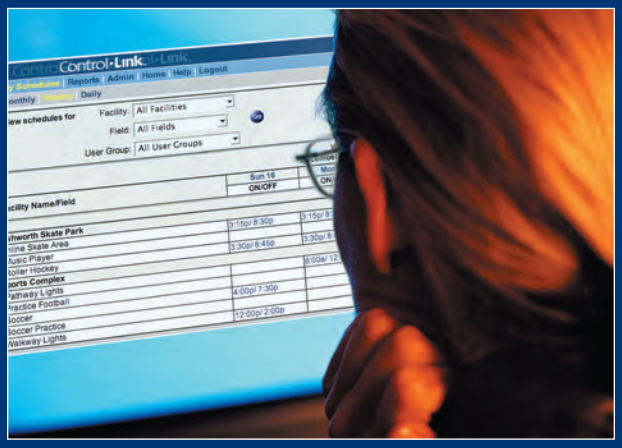

Get fingertip control of your facilities from

your desk

your field

your home

your phone

... from anywhere

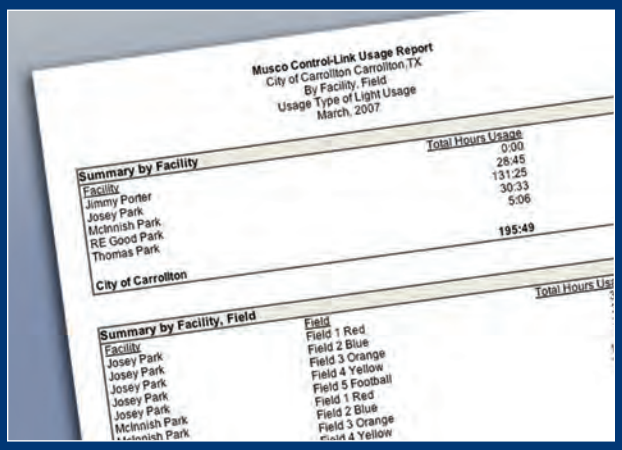

Musco Control-Link Usage Report
City of Carrollton Carrollton, TX
By Facility, Field
Usage Type of Light Usage
March, 2007

Summary by Facility	Total Hours Usage
Facility	
Jimmy Porter	0:00
Josey Park	28:45
McInnish Park	131:25
RE Good Park	30:33
Thomas Park	5:06
City of Carrollton	195:49

Summary by Facility, Field	
Facility	Field
Josey Park	Field 1 Red
Josey Park	Field 2 Blue
Josey Park	Field 3 Orange
Josey Park	Field 4 Yellow
Josey Park	Field 5 Football
McInnish Park	Field 1 Red
McInnish Park	Field 2 Blue
McInnish Park	Field 3 Orange
McInnish Park	Field 4 Yellow

musco® Lighting

We Make It Happen.®

Musco's Control-Link® System
for new and existing sports facilities

With cities and recreational needs growing faster than ever, it's critical to maximize your available resources and make solid decisions about managing and expanding your facilities.

Control-Link® is the reliable, cost-effective system that helps control, monitor, and manage your new recreational facility lighting. In addition, it can control your existing lighting systems and other electrically-operated equipment. Whether for new lighting systems or to upgrade existing lights, the Control-Link System includes our Control-Link Central™ team, the on-site Control-Link equipment, and an industry-leading warranty. Our exclusive Control-Link Central team is staffed 24/7 to assist with your scheduling and reporting needs.

Reduce energy cost and staff legwork

Control-Link reduces energy usage by operating lights and equipment only when needed. This helps curtail taxpayers' concerns about lights operating when fields are not in use. The automated system does not require staff to travel from field to field to turn lights on and off. It also eliminates distributing and tracking multiple sets of keys and reduces time coordinating staff and facility schedules.

Flexible control simplifies operational needs

Lighting schedules are entered into an easy-to-use Control-Link Central website or by email, phone, or fax. User passwords have varying access levels that you specify. Passwords, unlike keys, can be issued or cancelled at any time – making seasonal personnel or volunteer changes easier to manage.

Emergency schedule changes can be made through Control-Link Central, and on-site manual controls are provided for your maintenance staff.

Solid management tools reduce hassle

Control-Link saves you time overseeing facility operations, scheduling staff, and planning routine maintenance. Control-Link Central accumulates information for you about your facility usage, including operating history by facility and user group. The Control and Monitoring System provided with new lighting systems provides proactive monitoring of your lighting system, reporting fixture outages to help plan routine maintenance. A preseason light check helps assure your fields are ready for play.

Our Control-Link Central team can assist you in generating reports and analyzing your data to provide tools for efficient operations, allocation of costs, assessment of user fees, proactive maintenance, and facility expansion planning.

These capabilities provide for significant long-term cost savings and the potential for providing better customer service and innovative uses of your facilities without adding staff.

Manage you

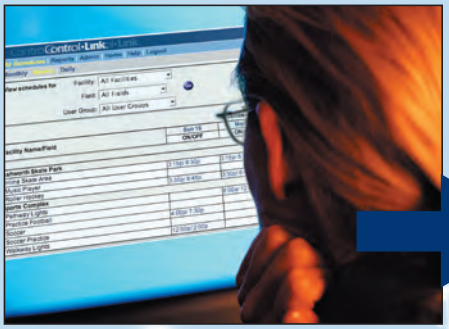

1 Enter schedules at your convenience

Enter schedules from any location via our easy-to-use Control-Link Central web site, or by email, phone, or fax.

- *Saves Energy and Staff Costs*
- *Allows Flexible Control*
- *Provides Usage Data*
- *Increases Security*
- *Provides Reliable Operation*
- *Monitors System Performance*

PRJ19-00008 Attachment 069

r lights without the late-night hours

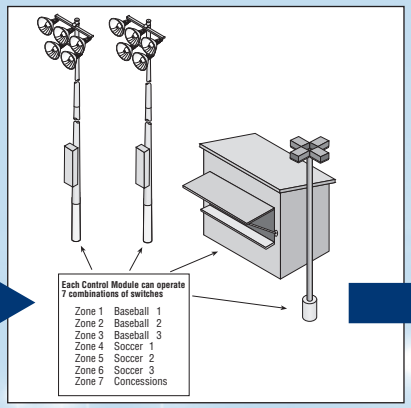

2 Schedules are stored on-site, backed-up at Control-Link Central™

Schedules are transmitted from Control-Link Central via digital cellular technology and stored in the on-site equipment controller.

3 Equipment is controlled automatically

Lights and other equipment such as door locks, concession stands, and security lights are operated per your schedules.

4 Control-Link Central™ provides support, monitoring, and usage data

Control-Link Central supports you every step of the way. Trained staff provide scheduling support and verification, and monitor your lighting system for fixture outages. Control-Link Central's database stores field usage data by facility and user group.

"Thank you so much for providing such an effective and advanced system for scheduling our lights; it has truly revolutionized the way we work."

— Kelly Barker
Athletic Field Permit Coordinator
Dept. of Parks, Recreation and Marine
City of Long Beach, CA

"It's like being an umpire. If people don't know you're there, you did a great job. If there aren't any complaints about the lights, I know the system is doing its job."

— Roger Russomanno
Ballfield Operations Supervisor
Denver, CO, Parks and Recreation Dept

"I use Control-Link Central™ to enter the weekly schedules so I can spend my time taking care of other things … They do a great job, week after week."

— John Banks
Park and Recreation Supervisor
Laguna Niguel, CA

PRJ19-00008 Attachment 069

Control•Link Central™

Trained Staff Available 24/7

Meet Our Control-Link Central Team

Control-Link Central provides trained technical assistance with the helpful, "can-do" attitude you expect from Musco, to solve any last-minute change or issue.

Control-Link Central operators oversee on/off control of over 5000 fields per night and have experience with controlling over 1.7 million schedules per year worldwide.

"We strive to provide a level of service where every customer reaches a live operator, rather than a voice mail system, when they call in. We can make your last minute scheduling changes happen in just a few minutes."

Ryan Tighe
Control-Link Central™ Manager

PRJ19-00008 Attachment 069

Control•Link Central™

Efficient Management Tools

Operations Support

Control-Link Central provides three options for management and control of your facilities:

- Directly control your fields via an easy-to-use website
- Enter, edit, and update your schedules from your web-enabled smart phone
- Contact Control-Link Central's team of trained operators 24/7 to enter your schedules and request last minute changes

Data Management

Control-Link Central offers effective tools to manage and analyze the extensive amount of stored information. Standard reports include usage reports by facility, field, and/or end-user.

System and Schedule Monitoring

The Control-Link Control and Monitoring System provided with new lighting systems checks your system performance each time your lights are turned on. If the system detects fixture outages that affect playability, your warranty specialist is notified and will contact you. Preseason checks can be a part of your proactive maintenance program to help make sure your lights are operating properly before the first game.

Control-Link Central staff monitors all schedules entered to make sure they are successfully received by the controller. In addition, they monitor the status of the system on a daily basis to ensure it is ready to run your schedules. If any system issues are detected, the Control-Link Central staff will contact you to resolve them before they become a problem.

Control-Link Activation

Once the on-site equipment is installed, a Musco technician will call the installing contractor and assist them in commissioning the system. The technician will send sample schedule commands to the Control-Link system to test each lighting zone and its associated control and lighting equipment. The technician will also collect baseline diagnostic data, allowing the lighting system to be monitored for correct operation from that point on.

Customer Training

Control-Link Central staff provides customer training via telephone, conference, or on-line tutorial covering Control-Link operation, scheduling, website access, and all user functions.

"We greatly appreciate your super-friendly service."

— Kelly Barker
Athletic Field Permit Coordinator
Dept. of Parks, Recreation and Marine
City of Long Beach, CA

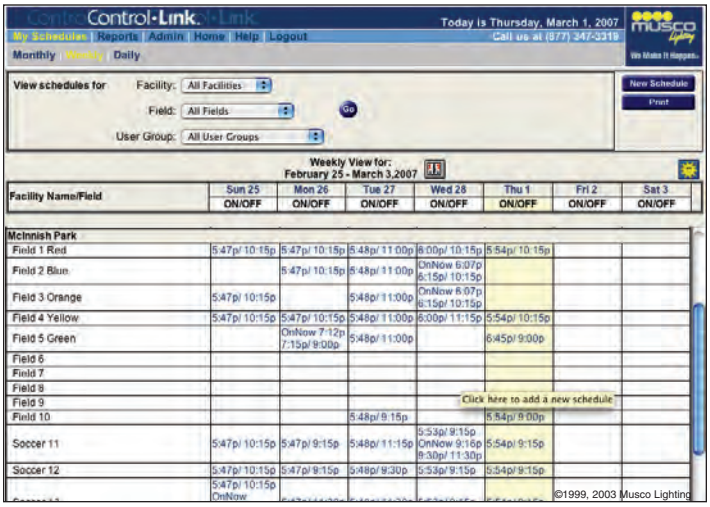

This is a partial sample of a customer's weekly schedule as entered on Musco's Control-Link website. The current day is always highlighted.

Musco Control-Link Usage Report (Auto Only)
By Facility, Field
Usage Type of Light Usage
June, 2010

Summary by Facility

Facility	Total Auto Hours Usage	Total Hours Saved from Early Offs
Cowley	112:50	17:08
Dunbar	64:53	29:46
Garland Parklet	49:48	0:00
Herschel Field	256:47	26:05
Total:	**484:18**	**72:59**

Summary by Facility, Field

Facility	Field	Total Auto Hours Usage	Total Hours Saved from Early Offs
Cowley	Baseball	63:04	17:08
Cowley	Basketball	49:46	0:00
Dunbar	Baseball	64:53	29:46
Garland Parklet	Courts	49:48	0:00
Herschel Field	(Lower) Baseball-FB	81:22	10:23

Control-Link Central's database stores usage data by field and user group.

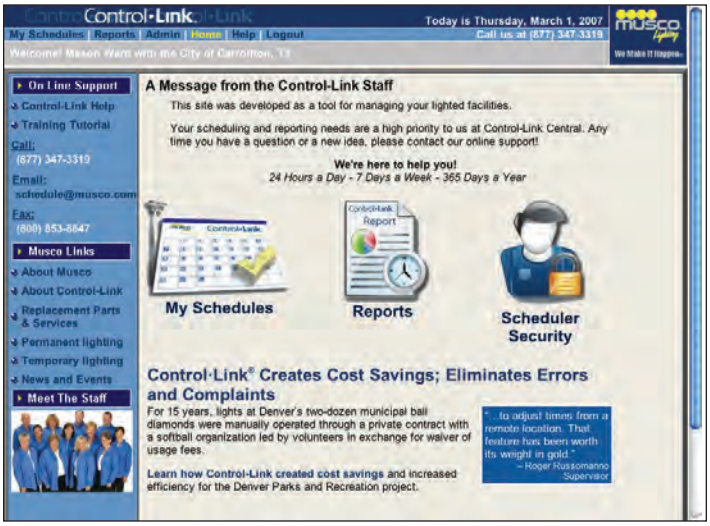

The Control-Link website provides easy and efficient scheduling of fields, reports, and control over the access levels of your Control-Link website users.

PRJ19-00008 Attachment 069

New System: On-Site Equipment Overview

The Control-Link Control and Monitoring System provides reliable, cost-effective control, monitoring, and management of your new recreational facility lighting.

Your factory-built and tested Control-Link equipment includes

- Digital cellular communication equipment
- Control and Monitoring cabinet(s)
- Surge protection device

Optional Equipment

- Remote Manual Switches cabinet

Supplied by Contractor

- Main disconnect (electrical distribution panel), conduit, and power wiring
- 20A control circuit
- Transformer if control voltage supply not available
- Mounting hardware for cabinets
- Conduit and NEMA Type 4 hubs

Control-Link® Control and Monitoring System

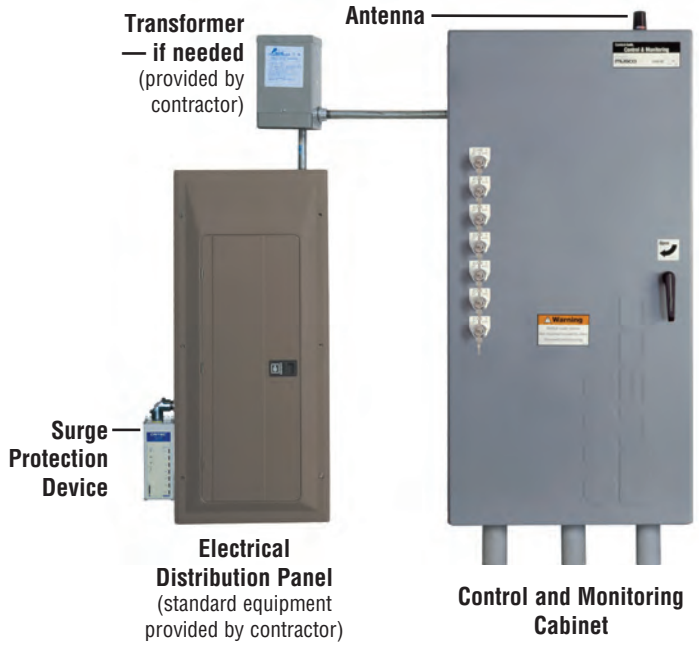

Control and Monitoring Cabinet

Enclosure

Large Enclosure

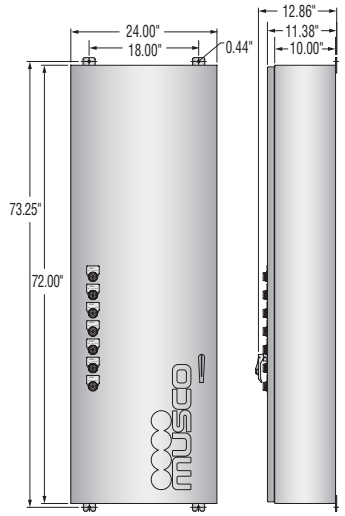

Small Enclosure

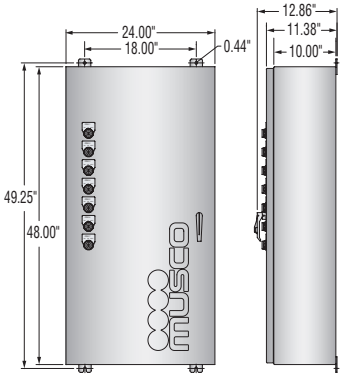

Technical Features

Assembled Cabinet

- Entire assembly UL 508 LISTED (Industrial Control Equip.) #E204954
- Meets FCC Part 15 Class A
- Factory wired, programmed, and tested
- Controls up to 7 zones per cabinet
- Operating temperature -20°C to +60°C (-4°F to +140°F)
- Internal time clock with battery back-up
- Database memory protected from power outages or fluctuations
- Typical enclosure and component weight: 72 inch – 150 lbs., 48 inch – 125 lbs. Project specific details available upon request

Enclosures

- NEMA Type 4, 5052 H32 aluminum
- Powder-coat finish after fabrication
- External mounting feet
- Lockable, 3-point latching assembly
- Door grounded enclosure

Manual Off-On-Auto Switches

- Keyed, maintain position
- Make-before-break contacts
- Factory wired to terminal blocks
- Mounted to maintain NEMA 4 rating
- Legend plate clearly identifies zone
- Switches may be placed in optional remote Manual Switches cabinet, see page 10 for details

Manual Off-On-Auto Switch detail

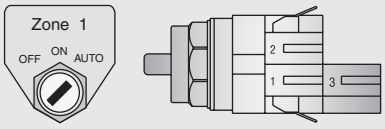

PRJ19-00008 Attachment 069

Control and Monitoring Cabinet

The on-site Control and Monitoring cabinet operates and monitors your new lighting system. It allows you to manage your schedules and facility usage from your home, office, or anywhere.

On/Off Control Module

Receives and stores schedules from Control-Link Central to operate your equipment and verify that schedules were carried out.

Monitoring Module

Monitors your lighting system and reports any fixture outages to help plan routine maintenance and keep your facilities operating.

Contactor Switching Modules

Switches your equipment on and off based on schedules stored in the control module.

Communication Modem Module

Reliable, high-speed integrated communication system provides two-way communication to Control-Link Central.

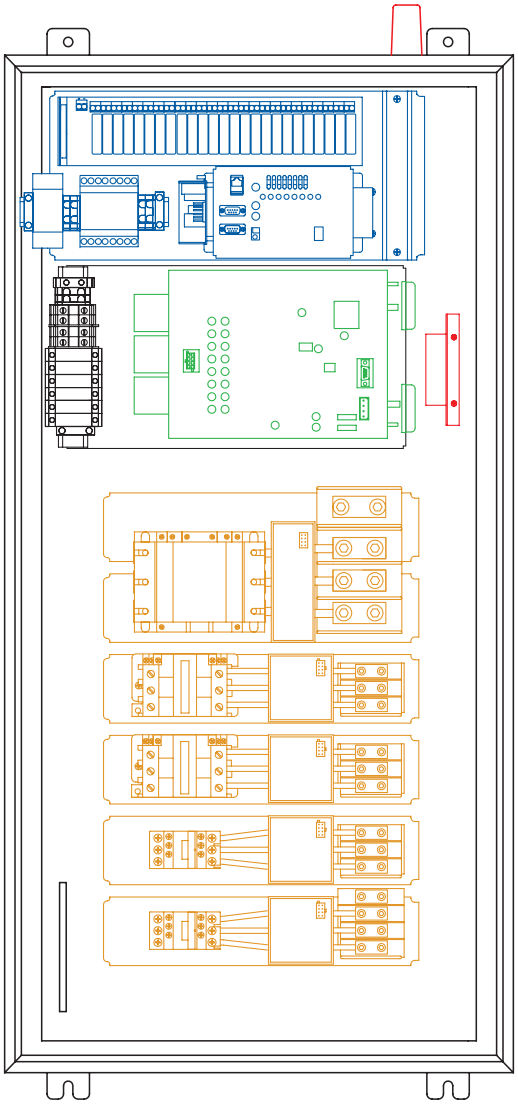

(Small Enclosure shown)

Technical Features

Panel

- 5052 H32 aluminum
- Pre-punched, modular configuration
- Powder-coat finish after fabrication

Communication Modem

- Digital cellular technology
- No additional monthly charges

Contactors

- Sized for 30, 60, or 100 amp lighting loads
- Electrically held
- 120 volt or 240 phase to neutral volt coil options

Ground Bar

- 15 grounding terminals provided
- Holds size #14 to #4 gauge wires

Internal Control Wiring

- Fuse holder 600 volt 30 amp IEC type
- Control terminal blocks mounted to DIN rail
- Plug-in wire harnesses for multiple cabinets (if required)

Contactor Module Options

Rated Lighting Capacity	Line Side Wire Size Range*	Load Side Wire Size Range*	Maximum Per Small Cabinet	Maximum Per Large Cabinet
30 amp	3–10 AWG	2/0–14 AWG	6	12
60 amp	2–10 AWG	2/0–14 AWG	6	12
100 amp	2/0–14 AWG	350mcm–6 AWG	3	6

* Stranded cable, single conductor, without cable end

PRJ19-00008 Attachment 069

Retrofit System: On-Site Equipment Overview

The Control-Link Control System provides reliable, cost effective control of your existing recreational facility lighting and other electrically-operated equipment.

Your factory-built and tested Control-Link equipment includes

- Digital cellular communication equipment
- Control cabinet(s)
- Remote Manual Switches cabinet

Supplied by Contractor

- Main disconnect (electrical distribution panel), conduit, and power wiring
- 20A control circuit
- Transformer if control voltage supply not available
- Mounting hardware for cabinets
- Conduit and NEMA Type 4 hubs

Control-Link® System

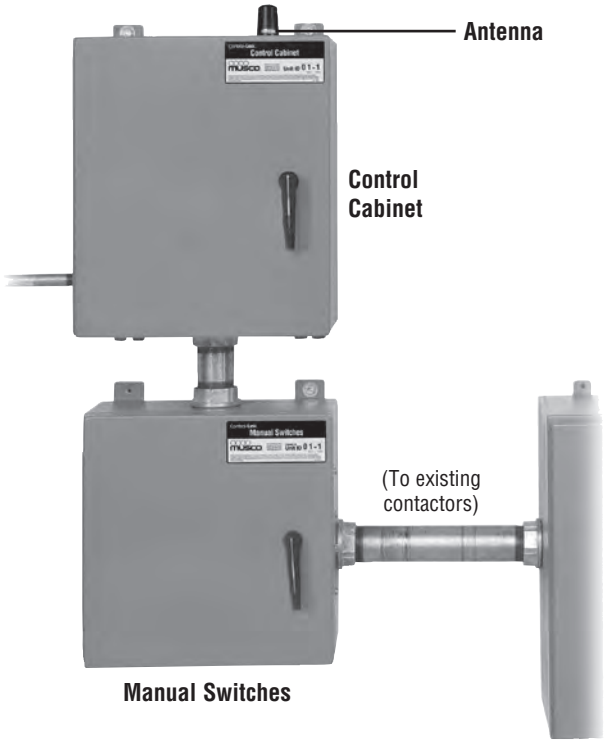

Control Cabinet

Enclosure

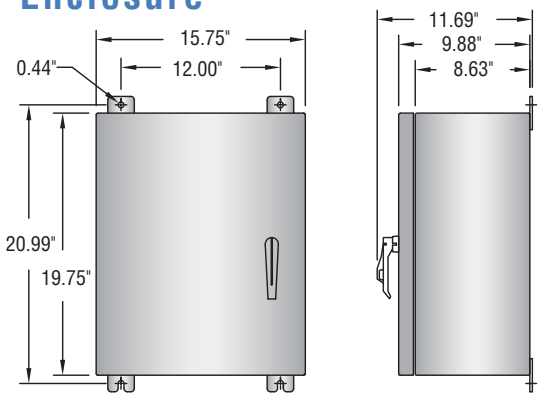

Control Cabinet

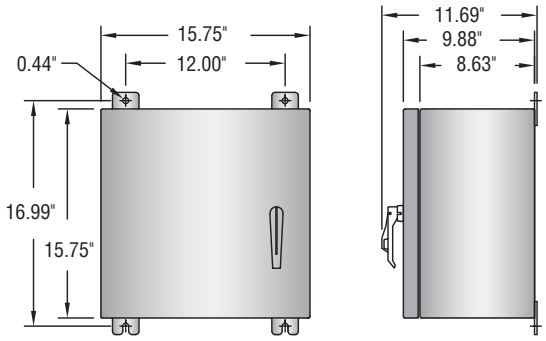

Manual Switches Cabinet

Technical Features

Assembled Cabinet

- Entire assembly UL 508 LISTED (Industrial Control Equip.) #E204954
- Meets FCC Part 15 Class A
- Factory wired, programmed, and tested
- Controls up to 7 zones per cabinet
- Operating temperature -20°C to +60°C (-4°F to +140°F)
- Internal time clock with battery back-up
- Database memory protected from power outages or fluctuations
- Typical enclosure and component weight: 28 lbs. Project specific details available upon request.

Enclosures

- NEMA Type 4, 5052 H32 aluminum enclosure
- Powder-coat finish after fabrication
- External mounting feet
- Lockable door
- Door grounded enclosure

PRJ19-00008 Attachment 069

Control Cabinet

The on-site Control Cabinet operates your existing sports facility's lights and equipment, allowing you to manage your schedules and facility usage from your home, office, or anywhere.

On/Off Control Module

Receives and stores schedules from Control-Link Central to operate your equipment and verifies schedules were carried out.

Communication Modem Module

Reliable, high-speed integrated communication system provides two-way communication to Control-Link Central.

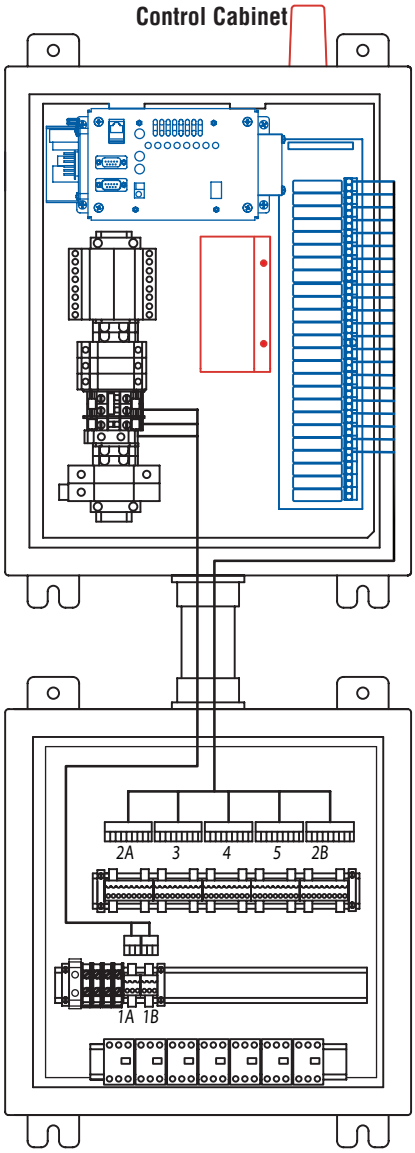

Manual Switches Cabinet
(connections behind switches)

Technical Features

Panel

- 5052 H32 aluminum
- Pre-punched, modular configuration
- Powder-coat finish after fabrication

Communication Modem

- Digital cellular technology
- No additional monthly charges

Internal Control Wiring

- Control terminal blocks mounted to DIN rail
- Plug-in wire harnesses for multiple cabinets

Manual Off-On-Auto Switch Detail
(Remote Manual Switches Cabinet)

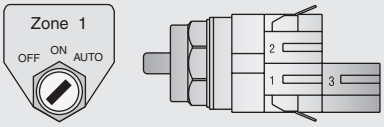

Remote Manual Switches Cabinet

The remote Manual Switches cabinet comes standard with the Retrofit System for operating your existing facility lighting.

Optional for the Control and Monitoring system, it provides for special switching requirements or for more convenient Off-On-Auto switch location for maintenance staff. Lockable cabinet helps prevent tampering for outdoor mounted equipment.

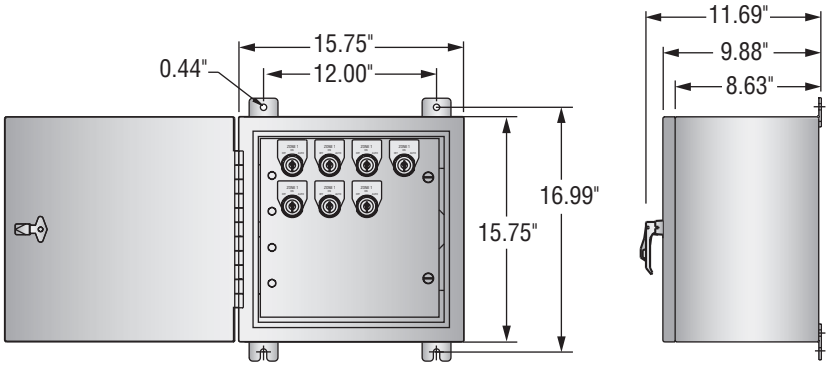

Manual Switches Cabinet

Technical Features

Remote Manual Switches Cabinet

- NEMA Type 4, 5052 H32 aluminum enclosure
- Operating temperature -20°C to +60°C (-4°F to +140°F)
- Powder-coat finish after fabrication
- External mounting feet
- Lockable, latching assembly
- Door electrically bonded to enclosure
- Locate up to 300 feet from Control Cabinet
- Typical enclosure and component weight 33 lbs. Project specific details available upon request.

Manual Off-On-Auto Switches

- Factory wired to terminal blocks
- Mounted to maintain NEMA 4 rating
- Legend plate clearly identifies zone

What Our Customers Have to Say

Usage Data is Great

"It's been great. It's ten times better than anything we've tried before. The field usage data is great. Our monthly reports needed for financial planning are more accurate and easy to do. That makes setting user fees much easier. The customer service we continue to get from Musco is excellent. I know I can call them anytime, from anywhere, and they're right there to help, 24 hours a day, 7 days a week."

Judy Flynn
Former Recreation Supervisor
City of Corona, California

Corona Park, California

Neighbors Appreciate Control Link

"We used to get calls from neighbors every once in a while that the lights had been left on, and someone would have to go out in the middle of the night to turn them off. Neighbors have called us saying how much they appreciate the lights being on only when someone is actually using the field."

Scott Whitaker
Park & Recreation Director
City of Carrollton, Texas

Carrollton Sports Complex, Texas

Easy to Operate

"Musco's Control and Monitoring System is definitely a more proactive approach than our previous system. When there is a problem, the monitoring system allows a warranty specialist to immediately notify us. This is a huge asset, as problems are resolved right away. The system is user friendly, very efficient, and easy to operate. Using a phone to call Control-Link Central is much easier than our previous system, which required a laptop to dial in and make changes to a particular facility. The simplicity of this system is very refreshing."

Joe Ross
Recreation Programmer
City of Rialto, Recreation and Community Services
Rialto, CA

Customer Service Second to None

"We enjoy the great customer service. The staff answering the phones are so polite and we really appreciate that. We value being able to monitor the usage of the facilities through the website. Control-Link helps ensure that field lights are turned off when they are supposed to be. We no longer receive calls at 1:00 in the morning that the lights were left on. The monitoring system has also been impressive. We received a call during the day that there was a problem with one of the fixtures. After checking the fuses, we replaced one and the system was back to go. The problem was resolved before we would have even been aware there was a problem."

Stephen Cooke
Sports Manager, Greenville County Recreation Dept.
Assistant District Administrator SC District 7 Little League
Greenville, SC

PRJ19-00008 Attachment 069

Musco Systems to Meet Your Sports-Lighting Needs

Light-Structure Green™

Outdoor: New Lighting Applications

Still engineered as 5 Easy Pieces™, Light-Structure Green™ offers unequaled performance for your budget, for the environment.

- **Cuts operating costs in half**
- **Reduces off-site spill light by 50%**
- **Eliminates 100% maintenance costs for 25 years, including lamp replacements**
- **Provides guaranteed Constant Light™ levels**

SportsCluster Green™

Outdoor & Indoor: Retrofit Applications

A modular photometric unit, factory aimed and tested, to perform from your choice of structures, making retrofit of old equipment easy.

- **Cuts operating costs in half**
- **Reduces off-site spill light by 50%**
- **Eliminates 100% maintenance costs for 10 years, including lamp replacements**
- **Provides guaranteed Constant Light™ levels**

Light-Pak™

Indoor: New and Retrofit Applications

Energy-efficient, indoor sports lighting that operates at your choice of two energy levels for improved cost control.

- **Saves energy costs over alternative systems**

We Make It Happen®

www.musco.com

email: lighting@musco.com

United States Patents: D411096, D567422, D567433, D573752, D574098, D577149, D593883, 5398478, 5426577, 5600537, 6036338, 6203176, 6250596, 6681110, 6969034, 7059572, 7176635, 7209958, 7452108, 7500764, 7527393, 7547118, 7675251, 7600901, 7736024, 7740381. Chinese Patents: ZL200530139426.7, ZL200680008460.2, ZL200680008829.X, ZL200680008830.2, ZL200680008832.1. U.S. and foreign patents pending. [033R40_101510]

©1998, 2010 Musco Sports Lighting, LLC
B-5050-11