CRITICAL AREAS REPORT & CONCEPTUAL MITIGATION PLAN

HYLA CROSSING PUMPED STORMWATER DISCHARGE PROJECT

ISSAQUAH, WASHINGTON

Prepared For:
KPFF CONSULTING ENGINEERS
Seattle, Washington

Prepared By:
TALASAEA CONSULTANTS, INC.
Woodinville, Washington

12 April 2021

Critical Areas Report & Conceptual Mitigation Plan

Hyla Crossing Pumped Stormwater Discharge Project

Issaquah, Washington

Prepared for:
KPFF Consulting Engineers
c/o Martin F. Chase
1601 5th Ave #1600
Seattle, WA 98101

Prepared By:
Talasaea Consultants, Inc.
15020 Bear Creek Road NE
Woodinville, Washington 98077
(425) 861-7550

12 April 2021

EXECUTIVE SUMMARY

PROJECT NAME: Hyla Crossing Pumped Stormwater Discharge Project

CLIENT: KPFF Consulting Engineers, c/o Martin Chase, PE

SITE LOCATION: The Project Area includes parcels north and south of Interstate 90 in the City of Issaquah, including the Greenwood Trust Sammamish Cove Park (King County Tax Parcels 202406-9070 (City of Issaquah parcel) and the NW Sammamish Road right-of-way, with an additional parcel located south of I-90 King County Tax Parcel 356000-0140). The Public Land Survey System location of the property is NW ¼ of Section 20, Township 24 North, Range 6 East, Willamette Meridian (W.M.).

PROJECT STAFF: Ann Olsen, RLA, Senior Project Manager; Jennifer Marriott, PWS, Senior Ecologist; and Aaron Ellig, Ecologist.

FIELD SURVEY: The Site was initially evaluated by Talasaea on 4 October 2018, with subsequent visits on 8, 11, and 12 October 2018 to identify baseline existing conditions. Talasaea also made visits to the Site on 30 October 2018, 19 February 2019, and 5 March 2019 to assess hydrology at the Site. Other site visits were made by others in previous years as part of the Environmental Impact Statement (EIS) process.

CRITICAL AREAS DETERMINATION: Lake Sammamish, Tibbetts Creek, Schneider Creek, and six (6) wetlands, Wetlands A – F, were identified within or adjacent to the project area. Five (5) of the wetlands (Wetlands A-E) were rated as Category III wetlands, and the sixth wetland (Wetland F) was rated as a Category II wetland. These wetlands are associated with the waterbodies listed above. Both Tibbetts Creek and Schneider Creek originate in the watershed south of I-90. They are both Class 2 streams with salmonids. Another wetland occurs off-site to the west in a swale (WSDOT Swale) south of I-90 parallel to the highway.

PROJECT NARRATIVE: Hyla Crossing is an assemblage of parcels on the south side of I-90 near Tibbetts Creek and SR-900. Currently, stormwater runoff is discharged directly to Tibbetts Creek with no flow control in place as the site was developed as early as the 1960s in some locations. Flow control is now required per the 2009 King County Surface Water Design Manual and the Rowley Center and Hyla Crossing Development Agreement, Appendix I (Utilities). Detention storage and individual pump stations pose an increased flood risk during heavy storm events and lead to potentially larger environmental impacts when considering power consumption, maintenance requirements, and standby fuel storage. As a more efficient and appropriate solution, a regional pump station was incorporated as a community commitment into the Hyla Crossing and Rowley Center Development Agreement (DA) to replace the need for individual detention systems and associated pump stations. The design will meet flow control requirements by pumping stormwater through a pipeline under I-90 to a nearshore outfall on a City-owned parcel adjacent to Lake Sammamish. The pipeline will cross a City of Issaquah owned parcel on the north side of I-90, where the outfall is located. This project intends to provide conveyance to Lake Sammamish and Tibbetts Creek as efficiently as possible given the proximity of the project on the valley floor to the lake. The site, given its high groundwater table, cannot effectively detain nor treat stormwater through low-impact development techniques at this scale.

HYDROLOGY: Hydrology for the wetlands broadly within the project area is primarily from groundwater, precipitation, and surface water flows during heavy rain events that lead to ponding in dense mats of reed canarygrass. The wetlands in the project area generally drain towards the larger water bodies by natural gradients and all are connected by surface hydrologic connections to Lake Sammamish.

SOILS: Soils within the Project Area are mapped by the NRCS as Bellingham silt loam (Bh) and Sammamish silt loam (Sh). Areas mapped as Shalcar muck (Sm) and Puget silt clay loam (Pu) occur in proximity to the Project Area. All four (4) soil map units are identified as hydric soils by the NRCS Soil Data Access (SDA) Hydric Soils List.

VEGETATION: Vegetation across the two northern parcels (Sammamish Cove; Greenwood Trust) consists almost entirely of reed canarygrass. Forested vegetation and scrub-shrub vegetation are found

Copyright © 2021 Talasaea Consultants, Inc.

along the banks and buffers of Tibbetts Creek and Lake Sammamish. Forested vegetation on-site consists of red alder, black cottonwood, several willow species, red-osier dogwood, salmonberry, and lady fern.

PROPOSED PROJECT: The Hyla Crossing Stormwater Force Main Project proposes to construct a new pipeline that will convey stormwater within a targeted range from a new pump station to a nearshore outfall next to Lake Sammamish. The pipeline will total approximately 2,897 linear feet long. This pipeline will consist of a 24-inch HDPE force main to convey water to Lake Sammamish from the Hyla Crossing properties.

In 2017, an adjacent new development completed a bore under Tibbetts Creek for required utilities and in the process installed the 24-inch casing for the future pipeline for the Hyla Crossing stormwater force main. The new pipeline for this project will be connected to this existing casing stub located west of Tibbetts Creek in Northwest Poplar Way. The pipeline will then bore under I-90 from where it will change direction heading northwest along NW Sammamish Rd before turning north to the outfall.

Currently, runoff from the Hyla Crossing neighborhood is discharged to Tibbetts Creek without flow control mechanisms. Future redevelopment of Hyla Crossing will be required to meet Level 2 Flow Control requirements. The use of a new outfall to discharge stormwater directly to Lake Sammamish was previously determined to meet the Level 2 flow control requirements as outlined in the Master Development Agreement (DA) between Rowley Properties and the City of Issaquah.

REGULATORY REVIEW: All critical area impacts must adhere to the policies and guidance for compensatory mitigation provided in the following documents:

- *Hyla Crossing and Rowley Center Development Agreement, February 2012*
- Issaquah Municipal Code, Chapter 18.10 -- Critical Areas;
- The Washington State Department of Ecology (DOE) Publication #06-06-011a, *Wetland Mitigation in Washington State – Part 1: Agency Policies and Guidance,* and *Part 2: Developing Mitigation Plans (Version 1)*, dated March 2006; and
- The *Federal Compensatory Mitigation for Losses of Aquatic Resources Final Rule* (33 CFR Parts 325 and 332, April 10, 2008), effective June 9, 2008.

The fundamental objective of the compensatory mitigation plan is to offset environmental losses resulting from unavoidable impacts to waters of the U.S. Based upon the guidance in the above documents, all proposed mitigation shall be based on best available science and shall demonstrate no net loss of critical area functions and values.

ASSESSMENT OF CRITICAL AREA IMPACTS: Both permanent and temporary critical area impacts will occur between the proposed pump station and the nearshore outfall at Lake Sammamish.

Permanent Impacts: Construction of the outfall will occur 10 feet landward of the ordinary high water mark of Lake Sammamish. Total impacts from the outfall will be approximately 314 square feet. The pipe will consist of a 24-inch HDPE pipe from the pump station to the outfall. The outfall will consist of a grate inlet bubble-up structure with an aluminum bolt-down grate. 8-inch round rock will be utilized to dissipate energy.

Additionally, maintenance access will be required between NW Sammamish Rd and the nearshore outfall. This maintenance access will be provided by reconfiguring an existing pullout to tie into the proposed pipeline route. The top of the pipeline will be planted with a native grass seed mix appropriate for wetlands and that can tolerate minor disturbance from temporary pedestrian or vehicular maintenance access. This route will be used for maintenance inspections by the City of Issaquah during the growing season and heavy rain events. Temporary wetland impacts will be avoided in the future through the use of protective plastic mats through the wetland when vehicular access is required. Permanent wetland impacts for the outfall and the reconfiguration of the pullout are 805 square feet (sf) and permanent wetland buffer impacts are 632 sf. Individual features are described below:

- Permanent wetland impacts will total 805 sf
    - Associated with the outfall - 315 sf
    - Associated with the pullout - 490 sf
- Permanent wetland buffer impacts associated with the pullout will be 632 sf

Copyright © 2021 Talasaea Consultants, Inc.

Temporary Construction Impacts: Pipeline construction between the end of the bore at the north side of I-90 and the nearshore outfall will temporarily impact both wetland and buffer areas. Temporary wetland impacts are 28,974 sf and temporary buffer impacts are 33,792 sf. Individual features are described below:

- Temporary wetland impacts will total 28,974 sf
    - 6,947 sf associated with the 10-ft wide pipeline corridor and maintenance access through Sammamish Cove
    - 19,828 sf associated with the temporary construction work area through Sammamish Cove;
    - 2,199 sf associated with the pipeline installation through the NW Sammamish Road swale along NW Sammamish Road
- Temporary wetland buffer impacts associated with the pipeline installation through the NW Sammamish Road swale will be 33,792 sf

FLOODPLAIN & NATIVE VEGETATION IMPACT ASSESSMENT: No net loss of floodplain compensatory storage is proposed as part of this Project. A Habitat Impact Analysis (HIA) was prepared to assess the potential impacts to native habitats within the 100-year floodplain. The HIA concluded that the project determination of ***May Affect, Not Likely to Adversely Affect (NLAA)*** is appropriate for wetlands, streams, water quality or flow, floodplain refugia, or any type of wildlife habitat for listed or non-listed species.

PROPOSED MITIGATION: To mitigate for permanent wetland and buffer impacts, we are proposing purchasing credits at the Keller Farm Mitigation Bank (KFMB) recently approved by the Interagency Review Team (IRT) in December 2019. Per Issaquah Municipal Code (IMC) §18.10.720.I: Wetland Mitigation Banking: The City may consider and approve replacement or enhancement of unavoidable adverse impacts to wetlands caused by development activities through an approved wetland mitigation bank, in advance of authorized impacts.

To mitigate for temporary wetland and buffer impacts for the pipeline construction, restoration is proposed. To mitigate for floodplain impacts, compensatory flood storage will be provided adjacent to the pump station in the buffer for Tibbetts Creek. Because the compensatory flood storage is located in the Tibbetts Creek Buffer, and as a future requirement of the DA between Rowley Properties, Inc. and the City of Issaquah, 0.6 acres of the Tibbetts Creek buffer will also be restored as part of this project that includes the compensatory flood storage. This work was previously planned to be completed when one million sf was redeveloped in the Hyla Crossing neighborhood. To date, less than 200,000 sf has been redeveloped. The restoration of the 0.6-acre buffer for Tibbetts Creek is proposed despite not meeting the redevelopment threshold because work is proposed within this specific area. Mitigation within the 0.6-acre area will include replacing existing impervious surface areas with native soils and vegetation. A soft-surface trail (NTE 14') and small natural seating areas will be installed in the outer 25% of the averaged Tibbetts Creek buffer per Appendix D 3.B of the DA. The trail will connect with the 19th Avenue NW walking path and the newly installed boardwalk through Tibbetts Creek Greenway.

Therefore, the final mitigation proposed for the Hyla Crossing Pumped Stormwater Discharge Project are as follows:

- Purchase credits at the KFMB to compensate for permanent wetland and buffer impacts;
- Restore 28,974 sf of temporary impacts to Wetland E;
- Restore 33,792 sf of temporary impacts to Wetland E buffer;
- Restore 26,154 sf of Tibbetts Creek buffer for both compensatory flood storage and as per Appendix J (Critical Areas) of the DA

.

Copyright © 2021 Talasaea Consultants, Inc.

TABLE OF CONTENTS

Chapter 1. Introduction 1
1.1 Report Purpose 1
1.2 Statement of Accuracy 1
1.3 Qualifications 2
Chapter 2. Property Overview 2
2.1 Project Purpose and History 2
2.2 Tibbetts Creek Greenway History 3
2.3 Property Description and Location 4
2.4 Existing Site Conditions 4
Chapter 3. Methodology 5
3.1 Background Data Review 5
3.2 Field Investigation 6
Chapter 4. Results 7
4.1 Analysis of Resource Information 7
4.1.1 National Wetlands Inventory (NWI) 7
4.1.2 Natural Resources Conservation Service 7
4.1.3 King County Critical Areas Map 7
4.1.4 City of Issaquah Critical Areas Map 7
4.1.5 Priority Habitats and Species 7
4.1.6 SalmonScape and StreamNet 8
4.1.7 Federally-Listed Species 8
4.2 Analysis of Existing Site Conditions 8
4.2.1 Wetlands 9
4.2.2 Streams 11
4.2.3 Lake Sammamish 13
4.2.4 Floodplain Area 13
Chapter 5. Analysis of Critical Areas Regulations 14
5.1 City of Issaquah 14
5.1.1 Non-Shoreline Jurisdiction 14
5.1.2 Shoreline Jurisdiction 14
5.2 State and Federal Regulations 15
5.2.1 Washington State Regulations 15
5.2.2 Federal Regulations 15
Chapter 6. Proposed Project 15
6.1 Project Elements 16
6.1.1 Pump Station 16
6.1.2 I-90 Force main Crossing (Bore) 17
6.1.3 NW Sammamish Rd Swale 17
6.1.4 Pipeline Connecting Road to Outfall 17
6.1.5 Nearshore Outfall 18
6.2 Enhanced Stormwater Treatment 19
6.3 Project Alternatives 19

Copyright © 2021 Talasaea Consultants, Inc.

Chapter 7. Impacts of Proposed Development 19
7.1 Assessment of Development Impacts 19
7.1.1 Pump Station 20
7.1.2 I-90 Force Main Crossing (Bore) 20
7.1.3 NW Sammamish Rd Swale 21
7.1.4 Pipeline Connecting Road to Outfall 21
7.1.5 Lake Sammamish Nearshore Outfall 22
7.2 Hydrology 22
7.3 Floodplain Impacts 22
7.3.1 Flood Storage Compensation 22
7.3.2 Habitat Impact Assessment 23
7.4 Assessment of Critical Habitats and Species Impacts 23
Chapter 8. Proposed Mitigation 23
8.1 Agency Policies and Guidance 23
8.2 Mitigation Sequencing 24
8.3 Mitigation Site Selection 25
8.4 Proposed Mitigation 25
8.5 Mitigation Bank Credits 26
8.6 Mitigation Bank Benefits 27
8.7 Wetland and Buffer Restoration 27
8.8 Floodplain Habitat and Storage Mitigation 27
8.9 Mitigation Design Elements 27
8.9.1 Removal of Non-native, Invasive Plant Species 28
8.9.2 Restoration Planting 28
8.9.3 Planting Plan 28
8.9.4 Temporary Irrigation 28
8.9.5 Mitigation Goals 28
Chapter 9. Construction Sequencing 29
9.1 Mitigation Construction Sequence 29
9.2 Post-Construction Approval 29
9.3 Post-Construction Assessment 29
Chapter 10. Monitoring Plan 29
10.1 Reports 30
10.2 Monitoring Methods 30
10.3 Photo Documentation 31
10.4 Water Quality and Site Stability 31
Chapter 11. Maintenance and Contingency 31
Chapter 12. Mitigation Site Protections 32
Chapter 13. Summary 33
Chapter 14. References 32

Copyright © 2021 Talasaea Consultants, Inc.

LIST OF FIGURES

Figure 1 – Vicinity Map with Driving Directions
Figure 2 – Parcel Map
Figure 3 – Site Map
Figure 4 – National Wetlands Inventory Map
Figure 5 – NRCS Soil Map
Figure 6 – King County Critical Areas Map
Figure 7 – City of Issaquah Floodplain Map

Note: All figures are located at the end of the report before the appendices.

LIST OF TABLES

Table 1. Summary of Critical Areas Locations within Project and Study Areas..... 8
Table 2. Summary of Critical Area Impacts 20
Table 3. Keller Farm Mitigation Bank Credit Purchasing Ratios 26
Table 4. Projected Schedule for Performance Monitoring and Maintenance Events.....30

APPENDICES

Appendix A: Wetland Delineation Data Sheets, Talasaea Consultants, 2019.
Appendix B: Wetland Rating Forms, *Washington State Department of Ecology Wetland Rating System for Western Washington* (2014), Talasaea Consultants, 2019.
Appendix C: Rowley Development Agreement – Appendix J
Appendix D: Hyla Crossing Pumped Stormwater Outfall Alternatives Analysis
Appendix E: Keller Farm Mitigation Bank Use Overview
Appendix F: Critical Areas Conceptual Mitigation Plans (large format)

Sheet W1.0: Existing Conditions Plan
Sheet W2.0: Proposed Site Plan, Impacts, & Mitigation Overview Plan
Sheet W3.0: Planting Plan
Sheet W3.1: Planting Plan
Sheet W3.2: Planting Plan
Sheet W3.3: Plant Schedule & Notes
Sheet W3.4: Planting Details
Sheet W4.0: Planting Specifications

Copyright © 2021 Talasaea Consultants, Inc.

CHAPTER 1. INTRODUCTION

1.1 Report Purpose

This report is the result of a critical areas study for the Hyla Crossing Pumped Stormwater Discharge Project Area (referred to as "Project Area" hereinafter). The Project is a linear utility that will construct a new force main (pipeline) starting at a new pump station south of Interstate 90 (I-90) and ending at a nearshore outfall to Lake Sammamish (**Figure 1**). The Project Area crosses several ownerships including Applicant-owned property, Sammamish Cove Park (public land), and several existing rights-of-way, including for I-90 (**Figure 2**).

The Project Area is defined as the area within which the pipeline, pump station, and outfall will be constructed and maintained. A greater Study Area was evaluated in order to assess the critical areas that occur in the vicinity of the Project Area, expanding to include a minimum of 200 feet from the Project Area, as required by the City of Issaquah. Discussions of existing conditions provided within this report relate to both the narrow Project Area and the greater Study Area.

The purpose of this report is to identify, describe, and categorize critical areas on or adjacent to the Project Area and Study Area; assess impacts resulting from the construction of the pump station, force main pipeline, and the stormwater outfall; provide a mitigation plan to compensate for proposed impacts to critical areas; and restore selected areas of the shoreline per City of Issaquah's Critical Areas Ordinance and Shoreline Master Plan as of April 2021.

This report has been designed to meet the Critical Areas Studies requirements as outlined under §18.10.410 of the Issaquah Municipal Code (IMC) while reflecting the previously agreed upon stipulations as outlined in the Rowley Development Agreement. Specifically, this report provides the following information:

- General property descriptions;
- Methodology for critical areas investigations;
- Review and evaluation of existing resource information;
- Review and evaluation of critical areas on and adjacent to the Project Area;
- Regulatory review;
- Project description;
- Assessment of development impacts to critical areas;
- Mitigation proposal to offset critical areas impacts;
- Construction sequencing;
- Performance monitoring plan and schedule; and
- Summary

Previously prepared documents that pertain to this project include:

- Rowley Development Agreement, 2012
- SEPA Decision No. SEP11-00005, 14 March 2012
- Final Environmental Impact Statement Hyla Crossing and Rowley Center Project, November 2011
- Hyla Crossing Master Drainage Plan, 20 December 2011
- Final Environmental Conditions Report Hyla Crossing – Wetland & Stream Study, The Watershed Company, 28 July 2010

1.2 Statement of Accuracy

The critical area studies and regulatory reviews were conducted by trained professionals of Talasaea Consultants, Inc., in adherence to the protocols, guidelines, and generally accepted industry standards available at the time work was performed. The conclusions in this report are

Copyright © 2021 Talasaea Consultants, Inc.

based on the results of analyses performed by Talasaea Consultants and represent our best professional judgment. To that extent, and within the limitations of project scope and budget, we believe the information provided herein is accurate and true to the best of our knowledge. Talasaea Consultants does not warrant any assumptions or conclusions not expressly made in this report or based on information or analyses other than what is included herein.

1.3 Qualifications

Field investigations and evaluations were conducted by Talasaea staff including: Ann Olsen, RLA, Senior Project Manager; Jennifer Marriott, PWS, Senior Wetland Ecologist (formerly at Talasaea Consultants); Richard Tveten, Senior Ecologist; and Aaron Ellig, Ecologist. Mitigation design was prepared by Ann Olsen, Registered Landscape Architect, License #777. Ann has over 27 years in environmental planning, mitigation and landscape design, and project management. Richard Tveten has a Master's Degree in Ecology from Western Washington University and 23 years of experience in wetlands delineation, restoration ecology and stormwater management. Aaron Ellig has a Bachelor's Degree in Environmental Science from Western Washington University. He has 8 years of experience in restoration ecology, wetland mitigation, and environmental permitting.

Ms. Marriott has continued her role as part of the environmental consulting team for this Project after leaving Talasaea Consultants and shifting direction to her own company, Wet.land, LLC. Jennifer Marriott has a Bachelor's Degree and a Master's Degree in Biology from University of Central Florida, and a second Master's Degree in Soil and Environmental Science from the University of Florida. She has 18 years of experience in wetland delineations and environmental permitting.

CHAPTER 2. PROPERTY OVERVIEW

2.1 Project Purpose and History

This project will reduce the risk of flooding and eliminate the need for multiple individual detention systems and pump stations within Hyla Crossing consistent with what was outlined in the Rowley Development Agreement (DA) and the Hyla Crossing Master Drainage Plan as a condition of the then future redevelopment, as approved by the City of Issaquah in 2012 and 2011, respectively. Hyla Crossing is an assemblage of already developed parcels totaling approximately 60 acres south of I-90. Stormwater under current conditions is discharged into Tibbetts Creek without flow control.

The DA outlined several items relating to stormwater management and critical areas as a condition of developing the property. Part of the DA was a commitment on the part of the landowner to work cooperatively with the City to meet the City's Tibbetts Creek Greenway goals. Two of the mentioned items in the DA were the addition of engineered flow control as part of the stormwater management design, as well as providing trails that would tie into a regional trail system. The Project proposes to construct a short segment of trail through the Project Area that will connect to a recently constructed boardwalk that crosses Tibbetts Creek.

In addition to providing design guidelines to the redevelopment process broadly, the DA also noted restoration and/or enhancement requirements relating to improvements to Tibbetts Creek and associated wetlands and buffers within the Hyla Crossing development. One of these targeted enhancement opportunities was a 0.6-acre buffer enhancement labeled Northern Enhancements and clearly depicted on Exhibit J-2 Northern Enhancements of the DA (**Figure 1** below in **Section 4.2.2.2**). This enhancement area will be included within the proposed Project and is part of the defined 100-foot averaged buffer for Tibbetts Creek that was previously evaluated and approved for Hyla Crossing as part of this DA. The other habitat enhancements

Copyright © 2021 Talasaea Consultants, Inc.

and restoration elements of the DA are beyond the current scope of the DA given the current stage of redevelopment, and thus, are not included within this Project.

The Project includes the new pump station that will be connected to a new nearshore outfall at Lake Sammamish through a new force main. This force main will convey designated stormwater to Lake Sammamish from the various redevelopments proposed within Hyla Crossing. Details on the specific Project elements are provided below in **Chapter 6**. The proposed Project is comprised of six (6) main elements:

1. Construction of a new pump station;
2. Tie into existing underground infrastructure for a short segment that presently crosses Tibbetts Creek;
3. Cross I-90 (bore);
4. Extend pipeline to Lake Sammamish;
5. Construct new outfall at the edge of Lake Sammamish; and
6. Connect pipeline to new outfall.

These basic project elements were outlined within the previously issued State Environmental Policy Act (SEPA) decision (SEPA MDNS, SEP11-00005), dated 14 March 2012, which at the time reviewed several alternatives for how water would enter Lake Sammamish. This will be discussed in more detail below with the discussion on project impacts.

2.2 Tibbetts Creek Greenway History

The Tibbetts Creek Greenway plan was outlined and studied in the Tibbetts Creek Greenway EIS in 1995 and in 1998 the City issued a mitigated determination of non-significance for the project. This is a City driven plan. During the Development Agreement negotiations and public process in 2011, Rowley agreed to work with the City to cooperatively meet the Tibbetts Creek Greenway goals. This SEPA decision was completed separately and prior to the 2011 SEPA decision for the proposed future outfall for the Hyla Crossing development.

In 2020, the City of Issaquah accepted title to the 5-acre parcel outlined in **Exhibit J4-Offsite Improvement Opportunity**. Rowley Properties worked with the Wolff Corporation as part of the Anthology Apartment development, and together these entities deeded this 5-acre parcel to the City. This area is located southwest of the 0.6-acre Northern Enhancement Area depicted in Exhibit J2 of the DA. Exhibit J-4 of the DA outlines the future Tibbetts Creek stream location if development occurs within the 100-foot buffer near the 0.6-acre North Enhancement Area, which is outside the Project Area for this proposed Project. The stream location was delayed for several reasons outlined below:

- The Development Agreement notes that: Until such time as the off-site enhancements depicted in Exhibit J-4 (the stream relocation) are completed, Master Developer shall neither construct any new structures nor expand any existing structures within one hundred feet (100') of that portion of Tibbetts Creek (in its current location) adjacent to and between the southerly face of Building 15 (as depicted in Figure 3.2-1 of the Hyla Crossing and Rowley Center Project FEIS) to the northerly boundary of Master Developer's ownership adjacent to I-90. Nothing herein shall prohibit Master Developer from expanding any existing buildings where such expansion occurs outside of the 100-foot buffer.
- This utility project is itself considered voluntary mitigation.
- Additional voluntary mitigation to be constructed with this project are:
    - The 0.6 acre restoration depicted in Exhibit J2 and
    - The soft-surface trail with seating and connectivity to the boardwalk, as depicted in Exhibit D2 (Appendix D-Community Space).

Copyright © 2021 Talasaea Consultants, Inc.

- The new public boardwalk constructed in 2019 now occupies the 5-acre parcel where the creek re-alignment was anticipated to occur.

Rowley's specific and owned portions of the mitigation areas are limited to the following:

1. Exhibit J2-Northern Enhancement Area, measuring 0.6 acres; and
2. Exhibit J3-Southern Enhancement Area, totaling 1.1 acres.

2.3 Property Description and Location

The Project Area is a new utility corridor that starts at an undeveloped parcel owned by the Applicant (King County tax parcel number 356000-0140; Latitude 47.550224, Longitude -122.067567) and ends at Lake Sammamish within the Greenwood Trust property owned by the City of Issaquah, also known as Sammamish Cove Park (King County tax parcel number 202406-9070; Latitude 47.555503, Longitude -122.073909) (**Figures 2** and **3**). The Public Land Survey System location of the Project Area is the NW ¼ of Section 20, T24N, R6E.

The Project Area for this force main will pass through existing rights-of-way (ROW) for several local roads, including NW Poplar Way and NW Sammamish Road, as well as for the Washington Department of Transportation (WSDOT)-managed I-90. The Project will run parallel to the State Park parcel boundary while remaining just outside of the State Park property. Therefore, no work is proposed within the State Park property.

In 2017, an adjacent new development completed a bore under Tibbetts Creek for required utilities and in the process installed the 24-inch pipe for the future connection to the Hyla Crossing stormwater force main. The new pipeline for this project will be connected to this existing pipe stub located within NW Poplar Way west of Tibbetts Creek. The pipeline will then bore under I-90 from where it will change direction heading northwest along NW Sammamish Rd before turning north to the outfall. The segments crossing under Tibbetts Creek and within NW Poplar Way were previously installed as part of other projects in the area, and thus, these segments are not included within this report/documentation.

2.4 Existing Site Conditions

The Project Area south of I-90 is developed except for the WSDOT-maintained swales (portions of which were previously identified as linear wetlands) and Tibbetts Creek. Very little native vegetation occurs within this portion of the Project Area outside of the immediate riparian corridor. Extensive coverage by invasive species is present, including reed canarygrass (*Phalaris arundinacea*) and Himalayan blackberry (*Rubus armeniacus*).

The Project Area north of I-90 is City-designated open space (Greenwood Trust/Sammamish Cove parcel) that is adjacent to Lake Sammamish State Park. This Greenwood Trust property is undeveloped, though a bridge over Tibbetts Creek allows access to this property from a parking lot for the State Park. The Greenwood Trust parcel has informally mulched walking trails throughout, including through portions of the wetland that are dry in the summer months (**Sheet W1.0 and Sheet W2.0** in **Appendix F**). The Study Area extends to include the adjacent parcel to the east that is part of the State Park on which two existing baseball fields with minimal infrastructure are located (King County tax parcel number 202406-9079). This parcel is currently excluded from the Project Area, though discussions were started, and later discarded, about potentially using this parcel for construction staging.

Vegetation throughout much of the Project Area north of I-90 consists of reed canarygrass and Himalayan blackberry in both the wetland and non-wetland areas. Various species of trees are located within the Study Area, within the uplands near Tibbetts Creek, and within the wetlands closer to Lake Sammamish. Shrub and tree-sized willows of various species occur closer to the

Copyright © 2021 Talasaea Consultants, Inc.

lake. Within the past 10 years, there have been various levels of effort to restore portions of this large wetland unit by planting native trees and shrubs. Additionally, the City of Issaquah has established a Carbon Credit Area within the Greenwood Trust (Sammamish Cove) parcel. This area consists of a variety of restoration plantings including both coniferous and deciduous species. The proposed pipeline route will not impact the Carbon Credit Area but will result in minor impacts to areas where volunteer groups have planted willow stakes. Based on City comments, the willow stakes that were installed by volunteers were mapped to approximate the extent and density of plantings where the pipeline route is proposed. Several of the installed willow stakes were determined to be dead, but the current density of rooted stakes was determined to be roughly 10-12 foot spacing on center. The volunteer planting area polygon and Carbon Credit Area polygon located within the Greenwood Trust parcel are shown on **Sheet W1.0 and Sheet W2.0**.

The topography is generally flat and slopes gently down towards Lake Sammamish. Tibbetts Creek is located within a clearly defined channel that occurs in the southeast corner of the Project Area, which then continues north and west to Lake Sammamish in the vicinity of the Project Area. Schneider Creek occurs within the Study Area west of the proposed pipeline corridor. An existing dock is located within the Greenwood Trust parcel within the Study Area but beyond the limits of the Project Area. It is our understanding that this dock is grandfathered to the parcel.

CHAPTER 3. METHODOLOGY

The critical areas analysis of the Project Area involved a two-part effort. The first part consisted of a preliminary assessment of the Project Area and immediate surrounding area using published environmental information. The City of Issaquah requires an evaluation of wetlands, potential wetlands, and streams within 200 feet of a site (Study Area). This information included:

1. Wetland and soils information from resource agencies;
2. Environmentally critical areas information from the City of Issaquah and King County;
3. GIS analysis of orthophotography and LIDAR data; and
4. Relevant studies completed or ongoing on, or in the vicinity of the Project Area.

The second part of our effort consisted of field investigations where direct observations of existing environmental conditions were made. Plant communities, soils, hydrology, stream, lake, and wildlife habitat conditions were observed. This information was used to help characterize critical areas and define the limits of wetland boundaries and the ordinary high water mark (OHWM) of adjacent streams and Lake Sammamish for regulatory purposes (see **Section 3.2 – Field Investigation** below).

3.1 Background Data Review

Background information from the following sources was used prior to our field investigations:

- U.S. Fish and Wildlife Service (USFWS) National Wetlands Inventory (NWI) map for the Issaquah Quadrangle;
- Natural Resources Conservation Service (NRCS) Soil Survey for King County Area;
- City of Issaquah GIS database;
- King County GIS database;
- Washington Department of Fish and Wildlife (WDFW) Priority Habitats and Species online mapping program information;
- StreamNet and SalmonScape databases;
- Orthophotography from NAIP, Google Earth Pro, and Earth Explorer; and
- LiDAR terrain data from DNR LiDAR Portal.

Copyright © 2021 Talasaea Consultants, Inc.

3.2 Field Investigation

The Project and Study Areas were initially evaluated by Talasaea on 4 October 2018, with subsequent visits on 8, 11, and 12 October 2018 to identify baseline existing conditions. Talasaea also made visits to the Project Area on 30 October 2018, 19 February 2019, and 5 March 2019 to assess hydrology within the large wetland that occurs within both the Project and Study Areas on the Greenwood Trust property.

Critical areas (wetlands, lake OHWM, and streams) were evaluated and delineated on 11 October 2018, and again on 11 September 2019.

Wetlands were delineated using the routine methodology described in the U.S. Army Corps of Engineers *Regional Supplement to the Corps of Engineers Wetland Delineation and Identification Manual: Western Mountains, Valleys, and Coast Region, Version 2* (U.S. Army Corps of Engineers 2010). Wetlands were rated using the *Washington State Wetland Rating System for Western Washington* (Hruby 2014). Wetland buffers were assigned according to City of Issaquah Municipal Code (IMC) §18.10.640.

Plant species were identified according to the taxonomy of Hitchcock, Cronquist, Owensby, and Thompson (Hitchcock, et al. 1969). Taxonomic names were updated, and plant wetland status was assigned according to the *North American Digital Flora: National Wetland Plant List, Version 2.4.0* (Lichvar 2012). Wetland classes were determined with the USFWS's system of wetland classification (Cowardin, *et al*. 1979). Vegetation was considered to be hydrophytic if greater than 50% of the dominant plant species had a wetland indicator status of facultative or wetter. (i.e., facultative, facultative wetland, or obligate wetland).

Wetland hydrology was determined based on the presence of hydrologic indicators listed in the Corps' Regional Supplement. These indicators are separated into Primary Indicators and Secondary Indicators. To confirm the presence of wetland hydrology one Primary Indicator or two Secondary Indicators must be demonstrated. Indicators of wetland hydrology may include, but are not necessarily limited to: drainage patterns, drift lines, sediment deposition, watermarks, stream gauge data and flood predictions, historical records, visual observation of saturated soils, and visual observation of inundation.

Soils were considered hydric if one or more of the hydric indicators listed in the Corps' Regional Supplement are present. Indicators include the presence of organic soils, reduced, depleted, or gleyed soils, or redoximorphic features in association with reduced soils.

An evaluation of patterns of vegetation, soil, and hydrology was made along the interface of wetland and upland. Wetland boundary points were delineated and flagged for later survey. **Appendix A** contains data forms prepared by Talasaea for representative locations in both upland and wetland. These data forms document the vegetation, soil, and hydrology information that aided in the wetland boundary determination.

Wetlands were rated using the Washington Department of Ecology's (WDOE) *Washington State Wetland Rating System for Western Washington* (Hruby 2014). **Appendix B** contains the WDOE wetland rating forms for the wetlands identified.

The OHWM of streams was delineated using the methodology described in *Determining the Ordinary High Water Mark for Shoreline Management Act Compliance in Washington State* (Anderson, *et al*. 2016). Streams were typed based on the water typing criteria contained under WAC 222-16-031, Interim water typing system, which is consistent with IMC §18.10.780, as well as WAC 222-16-030, water typing system. WAC 222-16-031 provides a water type conversation table that relates the stream typings between WAC 222-16-030 and WAC 222-16-031.

Copyright © 2021 Talasaea Consultants, Inc.

CHAPTER 4. RESULTS

This section describes the results of our in-house research and field investigations. For the purposes of this report, the term "vicinity" shall mean those areas within ¼ mile of the Project Area.

4.1 Analysis of Resource Information

4.1.1 National Wetlands Inventory (NWI)

The NWI maps the following features on and within the vicinity of the Project Area (**Figure 4**):

- L1UBH: Lacustrine, Limnetic, Unconsolidated Bottom, Permanently Flooded, consistent with portions of Lake Sammamish.
- PFOC: Palustrine, Forested, Seasonally Flooded.
- PSSC: Palustrine Scrub-Shrub Seasonally Flooded.
- PSSCx: Palustrine, Scrub-Shrub, Seasonally Flooded, Excavated.
- PEM1A: Palustrine, Emergent, Persistent, Temporarily Flooded.
- PEM1C: Palustrine, Emergent, Persistent, Seasonally Flooded
- R4SBC: Riverine Intermittent Streambed Seasonally Flooded stream consistent with the location of Schneider Creek

4.1.2 Natural Resources Conservation Service

The Natural Resources Conservation Service maps two (2) map units as overlapping the Project Area, including Bellingham silt loam (Bh) and Sammamish silt loam (Sh) (**Figure 5**). Areas mapped as Shalcar muck (Sm) and Puget silt clay loam (Pu) occur in proximity to the Project Area. All four (4) soil map units are identified as hydric soils by the NRCS Soil Data Access (SDA) Hydric Soils List.

4.1.3 King County Critical Areas Map

King County maps several types of critical areas on and adjacent to the Project Area (**Figure 6**). King County maps three (3) streams and one (1) wetland in the Project Area. Lake Sammamish is identified as a large waterbody adjacent to the Project Area's western boundary. The first stream, Tibbetts Creek, is mapped as flowing north through the Project Area before crossing I-90 and then turning northwest towards Lake Sammamish. The second stream, Schneider Creek, approaches the Greenwood Trust parcel from the south and flows north towards Lake Sammamish west of the Project Area. The third stream (0170 Drainage Ditch per City of Issaquah stream classification map) is a tributary to Tibbetts Creek that enters Tibbetts Creek near its 90-degree turn north of I-90 outside of the Project Area.

One large wetland is mapped as occurring in the northwest corner of the Greenwood Trust parcel and extending off-site to the north. The majority of the Greenwood Trust parcel falls within the FEMA preliminary 100-year floodplain, and a small portion of this parcel is mapped as a seismic hazard area.

4.1.4 City of Issaquah Critical Areas Map

The City of Issaquah does not map critical areas (wetlands, streams, steep slopes) as a data layer within the City's GIS Data Viewer. The City does, however, map portions of the Project Area within the 100-year floodplain of Lake Sammamish. Tibbetts Creek and Schneider Creek are depicted on the database as well with Tibbetts Creek identified as a floodway (**Figure 7**).

4.1.5 Priority Habitats and Species

We reviewed WDFW's Priority Habitats and Species online mapping tool. The following priority species are mapped on and adjacent to the Project Area:

- Winter Steelhead (*Oncorhynchus mykiss*): Occurrence, breeding area

Copyright © 2021 Talasaea Consultants, Inc.

- Coho salmon (*Oncorhynchus kisutch*): Occurrence, breeding area, migration
- Sockeye salmon (*Oncorhynchus nerka*): Occurrence, migration
- Resident Coastal Cutthroat trout (*Oncorhynchus clarki*): Occurrence, migration
- Kokanee trout (*Oncorhynchus nerka*): Occurrence, migration
- Townsend's Big-eared Bat (*Corynorhinus townsendii*): Communal Roost
- Yuma myotis Bat (*Myotis yumanensis*): Breeding area
- Little Brown Bat (*Myotis lucifugus*): Breeding area
- Big Brown Bat (*Eptesicus fuscus*): Communal roost

In addition to priority species, the below priority habitats are mapped:

- Freshwater Emergent Wetland aquatic habitat
- Freshwater Forested/Shrub Wetland aquatic habitat
- Freshwater Pond aquatic habitat
- Lake aquatic habitat

4.1.6 SalmonScape and StreamNet

Tibbetts Creek is mapped by SalmonScape and StreamNet as a Class 2 fish-bearing stream. Species listed as using the creek are Winter Steelhead trout, Kokanee salmon, Sockeye salmon, Resident Coastal Cutthroat trout, Chinook salmon, and Coho salmon. On both databases, a stream in the vicinity of Schneider Creek is shown but not named and not identified as fish-bearing.

4.1.7 Federally-Listed Species

Chinook salmon (status: endangered) and steelhead trout (aka winter steelhead, status: threatened) are federally-listed species for the Puget Sound region that are mapped as occurring within Lake Sammamish and Tibbetts Creek.

4.2 Analysis of Existing Site Conditions

Existing site conditions are outlined below and are based on delineation efforts undertaken as part of this specific project, as well as compiling previous delineations that were completed in recent years by projects in the surrounding areas.

Table 1. Summary of Critical Areas Locations within Project and Study Areas.

Feature ID	Project Area	Study Area
Wetland A	NO	YES
Wetland B	NO	YES
Wetland C	NO	YES
Wetland D	NO	YES
Wetland E	YES	YES
Wetland F	NO	YES
Tibbetts Creek Wetland	NO	YES
WSDOT Swale (Linear Wetland)	NO	YES
Tibbetts Creek	NO	YES
Schneider Creek	NO	YES
Lake Sammamish	YES	YES

Copyright © 2021 Talasaea Consultants, Inc.

4.2.1 Wetlands

Six (6) regulated wetlands were identified on, or in the vicinity of, the Project Area north of I-90 on the Greenwood Trust property as well as the adjacent State Park parcel (**Sheet W1.0** in **Appendix F**). These wetlands are described in more detail below. Additional wetlands occur near the Project Area south of I-90 that were previously identified on recently completed projects. This includes a large wetland west of Tibbetts Creek (Tibbetts Creek Wetland), south of the Project Area, as well as a small segment of a linear wetland that occurs in conjunction with one of the WSDOT-maintained swales (WSDOT Swale - West) near where the project proposes to bore under I-90. These wetlands are described in more detail below as well.

4.2.1.1 Wetland A

Wetland A is a depressional, palustrine emergent wetland according to the Hydrogeomorphic and Cowardin wetland classification systems, respectively (Brinson, n.d.) (Cowardin, et al. 1979). The wetland totals 7,657 sf (0.18 acres) on the Project Area. This wetland is located in the southeast corner of the Washington State Parks parcel on the north side of I-90. Wetland A is primarily vegetated with reed canarygrass.

Soils in this wetland are generally a brown (10YR 4/2) sandy loam from 0-12 inches below the soil surface and a dark brown (10YR 4/1) loam with dark yellowish-brown (10YR 4/6) redoximorphic concentrations from 12-17 inches. Hydrology for Wetland A is provided primarily by groundwater and direct precipitation. A plastic culvert drains surface water from Wetland A to Wetland B. No direct hydrology observations were made at the time of the site visit, however, hummocky reed canarygrass suggests standing surface water in the spring.

Wetland A scored 7 points for Water Quality Functions, 6 points for Hydrologic Functions, and 5 points for Habitat Functions. The Total Score for Functions was 18. This satisfies the criteria for classification of Wetland A as a City of Issaquah Category III wetland per IMC §18.10.640.C. Category III wetlands with a Habitat Function score of 5 require a standard buffer of 75 feet.

4.2.1.2 Wetland B

Wetland B is a depressional, palustrine emergent wetland according to the Hydrogeomorphic and Cowardin wetland classification systems, respectively. The wetland totals 9,978 sf (0.23 acres) on the Project Area. This wetland is located on the east side of the Washington State Parks parcel, just north of Wetland A. Wetland B is primarily vegetated with reed canarygrass. Other species that occur within the wetland include Oregon ash (*Fraxinus latifolia*) and a single black cottonwood (*Populus trichocarpa*) tree.

Soils in this wetland are generally a brown (10YR 4/3) loam from 0-10 inches below the soil surface and a dark brown (10YR 4/1) silt loam with yellowish-brown (10YR 4/4) redoximorphic concentrations from 12-17 inches. Hydrology for Wetland B is provided primarily by groundwater, surface water inputs from Wetland A, and direct precipitation. Surface water drains water from Wetland B to Tibbetts Creek. No direct hydrology observations were made at the time of the site visit, however, hummocky reed canarygrass suggests standing surface water in the spring.

Wetland B scored 7 points for Water Quality Functions, 6 points for Hydrologic Functions, and 5 points for Habitat Functions. The Total Score for Functions was 18. This satisfies the criteria for classification of Wetland B as a City of Issaquah Category III wetland per IMC §18.10.640.C. Category III wetlands with a Habitat Function score of 5 require a standard buffer of 75 feet.

4.2.1.3 Wetland C

Wetland C is a depressional, palustrine emergent wetland according to the Hydrogeomorphic and Cowardin wetland classification systems, respectively. The wetland totals 2,122 sf (0.05

Copyright © 2021 Talasaea Consultants, Inc.

acres) on the Project Area. This wetland is located east side of the Washington State Parks parcel, north of Wetland B. Wetland C is primarily vegetated with reed canarygrass.

Soils in this wetland are generally a brown loam and silt loam with slight mottling. Hydrology for Wetland C is provided primarily by groundwater, surface water flows from Wetland B, and direct precipitation. A plastic 6" flex pipe drains surface water under the trail from Wetland C to Tibbetts Creek. No direct hydrology observations were made at the time of the site visit.

Wetland C scored 7 points for Water Quality Functions, 6 points for Hydrologic Functions, and 5 points for Habitat Functions. The Total Score for Functions was 18. This satisfies the criteria for classification of Wetland C as a City of Issaquah Category III wetland per IMC §18.10.640.C. Category III wetlands with a Habitat Function score of 5 require a standard buffer of 75 feet.

4.2.1.4 Wetland D

Wetland D is a depressional, palustrine emergent wetland according to the Hydrogeomorphic and Cowardin wetland classification systems, respectively. The wetland totals 4,417 sf (0.1 acres) on the Project Area. This wetland is located in the center of the Washington State Parks parcel. Wetland D is primarily vegetated with reed canarygrass.

Soils in this wetland are generally a brown loam and silt loam with slight mottling. Hydrology for Wetland D is provided primarily by groundwater and direct precipitation. A plastic culvert drains surface water from Wetland D to Tibbetts Creek. No direct hydrology observations were made at the time of the site visit.

Wetland D scored 7 points for Water Quality Functions, 6 points for Hydrologic Functions, and 5 points for Habitat Functions. The Total Score for Functions was 18. This satisfies the criteria for classification of Wetland D as a City of Issaquah Category III wetland per IMC §18.10.640.C. Category III wetlands with a Habitat Function score of 5 require a standard buffer of 75 feet.

4.2.1.5 Wetland E

Wetland E is a slope wetland that transitions to a lacustrine fringe wetland where this wetland occurs adjacent to Lake Sammamish (Hydrogeomorphic wetland classification system). This wetland is classified as a palustrine emergent/forested wetland consistent with the Cowardin wetland classification system. The nearshore portion of the wetland is forested with an emergent understory. The wetland totals 475,261 sf (17.1 acres) on the Project Area. This wetland extends over the majority of the Greenwood Trust parcel. Wetland E occurs within shoreline jurisdiction due to its location adjacent to Lake Sammamish, a Shoreline of the State.

Wetland E is dominated by reed canarygrass across the vast majority of the wetland except near the lake shore. The vegetation near the lake shore consists of black cottonwood, several species of willow (*Salix spp.*), red osier dogwood (*Cornus sericea*), salmonberry (*Rubus spectabilis*), Himalayan blackberry, black twinberry (*Lonicera involucrata*), highbush cranberry (*Viburnum opulus*), and lady fern (*Athyrium filix-femina*).

Soils in this wetland are generally a brown loam and silt loam with slight mottling. Hydrology for Wetland E is provided primarily by groundwater and direct precipitation except for those areas of the wetland occurring adjacent to the lake. Water generally flows down gradient from east to west towards Lake Sammamish. Several areas of shallow surface water ponding and a high water table were observed throughout the early parts of the growing season. This wetland is typically dry in the summer months with little saturation and no inundation except where the lake supports wetland hydrology.

Wetland E scored 7 points for Water Quality Functions, 6 points for Hydrologic Functions, and 6 points for Habitat Functions. The Total Score for Functions was 19. This satisfies the criteria

Copyright © 2021 Talasaea Consultants, Inc.

for classification of Wetland E as a City of Issaquah Category III wetland per IMC §18.10.640.C. Category III wetlands with a Habitat Function score of 5 require a standard buffer of 75 feet.

4.2.1.6 Wetland F

Wetland F is a riverine, palustrine scrub-shrub wetland associated with Tibbetts Creek. The wetland totals 6,446 sf (0.15 acres) on the Project Area. This wetland is located on the southern side of Tibbetts Creek within the greater stream channel. Wetland F appears to have been previously restored and consists of diverse native shrubs. The vegetation within this wetland consists of red alder (*Alnus rubra*), black cottonwood, willows, red osier dogwood, salmonberry, Himalayan blackberry, black twinberry, and thimbleberry (*Rubus parviflorus*).

Soils in this wetland are generally a brown loam and silt loam with slight mottling. Hydrology for Wetland F is provided primarily by groundwater and overbank flooding from Tibbetts Creek.

Wetland F scored 8 points for Water Quality Functions, 7 points for Hydrologic Functions, and 6 points for Habitat Functions. The Total Score for Functions was 21. This satisfies the criteria for classification of Wetland F as a City of Issaquah Category II wetland per IMC §18.10.640.C. Category II wetlands with a Habitat Function score of 6 require a standard buffer of 100 feet.

4.2.1.7 Tibbetts Creek Wetland

The Tibbetts Creek Wetland is a large wetland complex that occurs south of the Project Area, on the west side of Tibbetts Creek. This large wetland was previously identified, delineated, and rated as part of several projects in this area. No datasheets or rating sheets are provided for this wetland as it occurs beyond the Project Area. Tibbetts Creek occurs within the buffer for this wetland between this wetland and the Project.

4.2.1.8 WSDOT Swales

A linear wetland was previously identified in the ROW on the south side of I-90 as part of the Anthology Apartments Project. This linear wetland is part of the WSDOT maintenance swale that manages runoff from I-90 south of the highway. Two separate swales are associated with the WSDOT ROW and are identified as WSDOT Swale – East and WSDOT Swale – West, which are separated by Tibbets Creek. No datasheets or rating sheets are provided for this wetland as part of this report.

4.2.2 Streams

Two (2) streams, Schneider Creek and Tibbetts Creek, were identified on or adjacent to the Project Area.

4.2.2.1 Schneider Creek

Schneider Creek is located along the southwest edge of the Greenwood Trust parcel that discharges into Lake Sammamish. Previous beaver activity in this stream has affected the channel and flows have periodically been rerouted through the southwest corner of Wetland E as a result of beaver dams. The most recent dams were removed in 2019 to redirect stream flow back into the main stream channel. Schneider Creek is identified as a Class 2 watercourse with salmonids. Class 2 streams used by salmonids in the City of Issaquah require a standard 100-foot buffer measured landward from the OHWM. Part of the buffer for Schneider Creek overlaps Wetland E.

4.2.2.2 Tibbetts Creek

Tibbetts Creek starts south of the Project Area and conveys regional drainage to Lake Sammamish. Tibbetts Creek crosses the Project Area south of I-90 before flowing under I-90. Tibbetts Creek then flows along the east side of the State Park parcel before making a 90-degree turn to the northwest towards Lake Sammamish.

Copyright © 2021 Talasaea Consultants, Inc.

Large portions of Tibbetts Creek occur within a clearly defined area that is designated as a floodway. Mapped 100-year floodplain associated with Tibbetts Creek extends into the Tibbetts Creek Wetland, as well as into the WSDOT swales south of I-90. Additional mapped 100-year floodplain occurs where Tibbetts Creek flows into Lake Sammamish, and portions of this floodplain extend over much of Wetland E within the Greenwood Trust property. Tibbetts Creek itself is located entirely outside of the Project Area, however, Tibbetts Creek was identified in the DA since a long stretch of it occurs within the greater Hyla Crossing property.

Tibbetts Creek is identified as a Class 2 watercourse with salmonids. Class 2 streams used by salmonids in the City of Issaquah require a standard 100-foot buffer measured landwards from the OHWM. Tibbetts Creek's buffer per the DA is variable in width and is partially dependent on agreed-upon habitat enhancement projects and projected redevelopment (DA, Appendix J, Section 7.B.1). One of the targeted enhancement areas along Tibbetts Creek is located immediately west of the proposed pump station facility identified as the "Northern Enhancement" (DA, Appendix J, Section 7.B.1.b.4). The Northern Enhancement area established a 100-foot averaged buffer on the east side of Tibbetts Creek and adds a designated 0.6-acre area of buffer enhancement (**Figure 1** below) between the pump house location and Tibbetts Creek.

Exhibit J-2 Northern Enhancements

Figure 1. Approximate Northern Enhancement area **(Exhibit J-2, Appendix J, DA).**

4.2.2.3 NW Sammamish Rd Swale

The NW Sammamish Rd Swale is located on the north side of NW Sammamish Road. The swale runs from east to west and is approximately 600 feet in length before the channel disperses into the adjacent wetland system (Wetland E). The swale is a constructed feature to

Copyright © 2021 Talasaea Consultants, Inc.

manage surface runoff with no direct surface connections to streams. The swale is identified as a linear wetland feature that is associated with Wetland E. It should be noted that the NW Sammamish Rd Swale is not a separate feature, but rather a distinctly different part of Wetland E that is located along the southern boundary. The swale is heavily disturbed and functions to convey stormwater from the adjacent roads.

Hydrology for the swale is primarily supported by two 12-inch culverts and one 18-inch culvert that feed runoff into this feature from the surrounding area, as well as sheet flows from the road. These culverts line up directly with the stormwater drains along I-90 and NW Sammamish Road. Hydrology appears to be present for short durations throughout the year and is presumed to correlate with heavy rain events.

Typical vegetation along the entire reach is reed canarygrass and Himalayan blackberry. Common invasive vegetation identified within the swale such as thistle spp., willowherb, and common mullein indicating prolonged periods of dry conditions.

4.2.3 Lake Sammamish

Lake Sammamish is a large lake located adjacent to the Project Area that is part of the regional stormwater management. There is a lake fringe wetland (a portion of Wetland E). Lake Sammamish bathymetry adjacent to the shoreline near the Project Area reflected a shallow water depth extending a substantial distance into the open water portion of the lake. Sediment plumes are periodically present in the broad vicinity of the Project area, as indicated via a review of aerial imagery, which are associated with where Tibbetts and Schneider Creeks discharge into Lake Sammamish, east and west of the Project Area, respectively. A small cove occurs in the Lake Sammamish shoreline where the Project Area is proposed.

The OHWM of Lake Sammamish was evaluated in the field based on field indicators. However, Lake Sammamish also has a defined OHWM elevation (standard elevation of 31.76 (feet) NAVD88 or 28.18 (feet) NGVD29, Shoreline Master Program (SMP) Chapter 4.1.1.4) defined by a set elevation, which was used for the purposes of this project. Buffers for Lake Sammamish are variable and dependent on the SMP based on the type of project proposed. Buffers and setbacks off Lake Sammamish do not apply to water-dependent utilities, such as stormwater discharge and outfall projects (SMP Chapter 4.5, Table 2 Development Standards for Shoreline Environments).

4.2.4 Floodplain Area

The City of Issaquah has identified the regulatory floodplain as areas of special flood hazard, which correspond with the FEMA 100-Year Floodplain. A Special Flood Hazard Area (SFHA) is defined as the land area covered by the floodwaters of the base flood on National Flood Insurance Program (NFIS) Maps. Tibbetts Creek is mapped as Floodway but no parts of the Project Area are mapped as a Channel Migration Area, though portions of the Project Area are mapped within the 100-Year FEMA Floodplain. The 100-Year FEMA Floodplain (SFHA) as mapped by King County iMap is shown in **Photo 1** below. The 100-year floodplain as mapped by FEMA in Firmette is consistent with the maps provided by the City of Issaquah (Flood Map #53033C0687F, Panel 687 of 1725 for King County, Washington). The two maps (City vs County) are different because the original FEMA map (shown on the left) has been superseded by a Letter of Map Revision (LOMR). The LOMR is reflected in the King County iMap. The result is that the floodplain is much more confined through the project site.

Copyright © 2021 Talasaea Consultants, Inc.

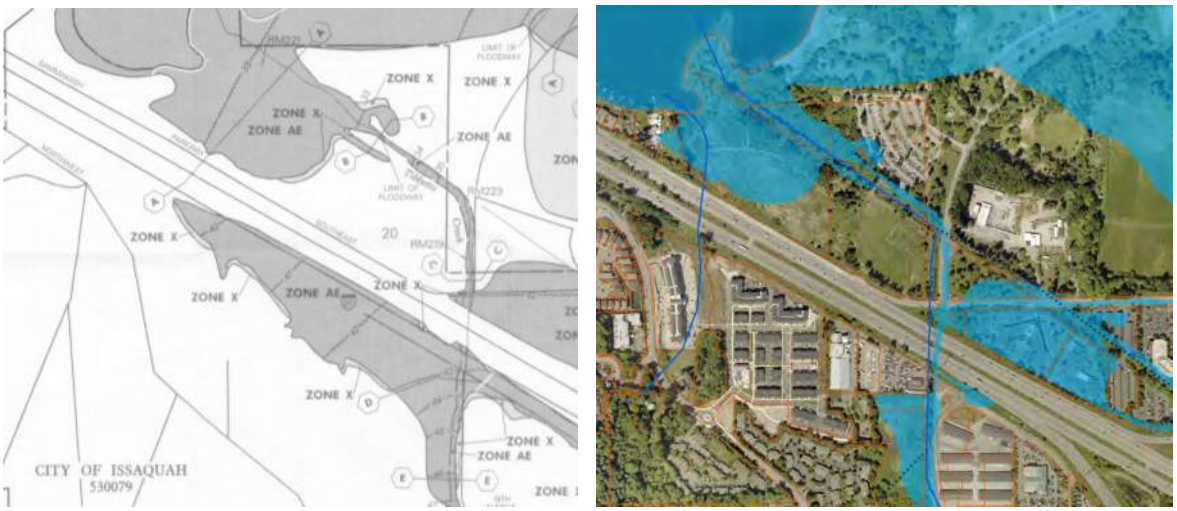

Photo 1. Mapped 100-year FEMA floodplain over the Site (City Map, Left, 1995; King County iMap, Right, 2020).

CHAPTER 5. ANALYSIS OF CRITICAL AREAS REGULATIONS

5.1 City of Issaquah

The City of Issaquah land use designation for the Hyla Crossing neighborhood, which includes the proposed force main, is Urban Village. The Rowley properties, along with several others south of I-90, are a part of a Development Agreement (DA). Previous delineations and stipulations outlined in this previously approved DA will be followed as applicable based on the work proposed with this Project to ensure all relevant parts of this agreement are met. See **Appendix C** for the Section J of the DA relating to critical areas.

Critical areas within the Project Area are subject to the regulations of the City of Issaquah's Shoreline Master Program (SMP) and Issaquah Municipal Code (IMC) Critical Areas Chapter 18.10 except where the agreements within the DA supersede the applicable regulations. The IMC is the guiding document on issues not specifically addressed in the DA.

5.1.1 Non-Shoreline Jurisdiction

The majority of the Project Area occurs outside of shoreline jurisdiction except for those areas that fall within Wetland E. IMC §18.10 applies to all critical areas within the Project and Study Areas, except for Wetland E, and defines the allowable uses and modifications to these critical areas, as well as outlining appropriate mitigation measures.

5.1.2 Shoreline Jurisdiction

Lake Sammamish is designated as a Shoreline of the State, and the section of shoreline adjacent to the Project Area has been designated as an Urban Conservancy shoreline environment. IMC Chapter 18.10.765 notes that "*development activity within 200 feet of the OHWM of Lake Sammamish is subject to the Shoreline Master Program (SMP).*" The SMP ultimately redirects back to IMC Chapter 18.10 to address impacts to critical areas and subsequent mitigation to compensate for critical areas impacts. A large wetland, Wetland E, falls within the 200-foot shorelands, and extends beyond the 200-foot width shorelands. The extent of this wetland extends beyond the mapped FEMA 100-year floodplain so it is presumed that shoreline jurisdiction will extend beyond Lake Sammamish through the entirety of the Wetland E boundaries.

Copyright © 2021 Talasaea Consultants, Inc.

IMC §18.10.720 outlines the requirements for mitigation for wetland impacts. In lieu of Permittee Responsible mitigation on the site, IMC §18.10.720.I allows for the use of mitigation banking:

> *Wetland Mitigation Banking: The City may consider and approve replacement or enhancement of unavoidable adverse impacts to wetlands caused by development activities through an approved wetland mitigation bank, in advance of authorized impacts.*

The Project Area occurs within the service area of the newly approved Keller Farm Mitigation Bank (KFMB) recently approved by the Interagency Review Team (IRT) in December 2019.

Utilities are an allowable use within Lake Sammamish Urban Conservancy through a Shoreline Substantial Development Permit (SSDP). Buffers and setbacks from the SMP do not apply to water-dependent uses such as stormwater outfalls, therefore, no buffers have been applied to Lake Sammamish for this Project.

The DA does not address or modify shoreline regulations as no part of the overall study area for the Rowley Property (Hyla Crossing) occurs within shoreline jurisdiction. Therefore, the current IMC will be used for proposed project elements that fall within shoreline jurisdiction.

5.2 State and Federal Regulations

5.2.1 Washington State Regulations

Critical areas (wetlands and streams) on the Project Area are subject to regulation at the State level primarily by the following statutes:

- State Water Pollution Control Act (administered by WDOE)
- Section 401 of the Federal Clean Water Act (administered by WDOE)
- Hydraulic Code of Washington (administered by WDFW)

WDOE uses Section 401 State Water Quality Certification (WQC) as the primary mechanism for implementing the provisions of the State Water Pollution Control Act. Section 401 WQC is typically issued in conjunction with Section 404 permits from the US Army Corps of Engineers (Corps). Any impacts within the OHWM of streams or lakes, or that have the potential to affect streams or lakes, would also be regulated under the Hydraulic Code of Washington as part of the Hydraulic Project Approval (HPA) permit process.

5.2.2 Federal Regulations

Critical areas (wetlands and streams) on the Project Area are also subject to Federal regulations under Sections 401 and 404 of the Clean Water Act. The Corps is responsible for administering compliance with Section 404 via the issuance of Nationwide or Individual Permits for any fill or dredging activities within wetlands, streams, or other “Waters of the United States”. Direct impacts (filling or dredging) to wetlands are being proposed for this project and will require 401 and 404 permits.

Federal regulations also evaluate the Project against applicable regulations for federally listed species through the ESA, and an effects determination is approved through this ESA review process.

CHAPTER 6. PROPOSED PROJECT

The Hyla Crossing Pumped Stormwater Discharge Project proposes to construct a new pipeline that will convey stormwater within a targeted range from a new pump station to a nearshore outfall to Lake Sammamish. Section 4.0 of Appendix J of the DA clearly states that public utilities, including stormwater, are a vested right with the DA. The pipeline will total approximately 2,897 linear feet in length. This pipeline will consist of a 24- inch HDPE force main to convey water to Lake Sammamish from properties south of I-90.

Copyright © 2021 Talasaea Consultants, Inc.

In 2017, an adjacent new development completed a bore under Tibbetts Creek for required utilities and in the process installed the 24-inch pipe for the future connection to the Hyla Crossing stormwater force main. The new pipeline for this project will be connected to this existing pipe stub located within NW Poplar Way west of Tibbetts Creek for the segment of the proposed pipeline that must cross Tibbetts Creek. Therefore, no new bore under Tibbetts Creek is required for this Project. The pipeline will then bore under I-90 from where it will change direction heading northwest along NW Sammamish Rd before turning north to the outfall.

Currently, runoff from the Hyla Crossing neighborhood is discharged to Tibbetts Creek without flow control mechanisms. Future redevelopment of Hyla Crossing is required to meet Level 2 Flow Control requirements. The use of a new outfall to discharge stormwater directly to Lake Sammamish was previously determined to meet the Level 2 flow control requirements as outlined in the Development Agreement (DA) between Rowley Properties and the City of Issaquah.

6.1 Project Elements

6.1.1 Pump Station

The pump station will be an approximately 900 square-foot concrete structure housing four pumps. The pump station will be located entirely outside of the averaged Tibbetts Creek buffer (the area designated as the 0.6-acre Northern Enhancement area) and still maintain a full 15-foot building setback. Flows between 50 percent of the 2-year and the 50-year pre-developed peak flow will be split between the new Lake Sammamish outfall structure through the proposed force main and the nearby WSDOT Swale - East which will convey these flows to Tibbetts Creek. This swale is considered a non-regulated feature that conveys stormwater to Tibbetts Creek in its existing condition. The WSDOT Swale - East outfall will consist of a structured bubble-up system that will be placed above the OHWM of Tibbetts Creek and above WSDOT Swale – East. Estimated 100-year peak flows will not exceed 19 cubic feet per second (cfs) through the bubble-up structure based on hydraulic models. The outfall will comply with all level 2 flow control requirements as outlined by the City of Issaquah. Standard temporary construction sediment and flow control best management practices (BMPs) will be implemented. Stormwater will be diverted through the remaining two pumps to the nearshore outfall next to Lake Sammamish in accordance with the Tibbetts Creek level 2 flow control standard.

The Lake Sammamish force main route, upon leaving the pump station, will tie into an existing, buried pipeline that was installed in conjunction with previous nearby developments. This buried pipe extends underneath Tibbetts Creek and a portion of the newly constructed NW Poplar Way west of the pump station. No new bore will be required under Tibbetts Creek. The existing pipe ends at the northwest corner of the new office building commercial development, in WSDOT Swale – West, and was positioned to set this Project up for the turn to bore underneath I-90.

Based on hydraulic modeling, the peak flow through the Lake Sammamish force main will not exceed 11.6 cfs. Lake Sammamish is designated as an exempt receiving water and therefore does not have applicable flow control requirements.

The 0.6-acre Northern Enhancement area, as defined in the DA, will be restored as functional stream buffer in conjunction with the proposed project, while also providing necessary compensatory flood storage. Restoration of the 0.6-acre Northern Enhancement area is a future requirement of the DA between Rowley Properties, Inc. and the City of Issaquah. Originally, this work was targeted to be completed when one million sf of redevelopment occurred in the Hyla Crossing neighborhood. To date, less than 200,000 sf has been developed. Part of this restoration effort will include replacing existing impervious surface areas with native soils and vegetation. A soft-surface trail (not to exceed 14 feet in width) and small

Copyright © 2021 Talasaea Consultants, Inc.

natural seating areas will be installed in the outer 25% of the averaged Tibbetts Creek buffer per Appendix D 3.B of the DA. The trail will connect with the 19th Avenue NW walking path and the newly installed boardwalk through Tibbetts Creek Greenway. Per exhibit D2 of the DA, the exact trail alignment within the 0.6-acre Northern Enhancement area will be established by Talasaea within the Landscape Plan provided concurrently as part of the Administrative Site Development Permit (ASDP) submittal.

6.1.2 I-90 Force main Crossing (Bore)

The I-90 force main crossing will involve boring underneath I-90. The sending and receiving pits will be located outside of the WSDOT ROW for I-90 south of the highway but will occur partially within the NW Sammamish Rd ROW north of the highway. The I-90 force main crossing will utilize a trenchless construction method to minimize impacts to critical areas and reduce impacts to general highway functionality.

Several alternative crossing locations and construction methods were considered to determine the most appropriate option for this location. Existing site constraints for this crossing, including a sanitary sewer located at Northwest Poplar Way, existing soils through which the bore will occur, and the eastbound I-90 swale, restricted what boring locations, angles, and depths were best suited for this Project. The existing infrastructure pushed the casing to 14-feet below highway grade, which is the current conceptual design. Final design may change based on WSDOT feedback and approvals.

6.1.3 NW Sammamish Rd Swale

The NW Sammamish Rd Swale north of I-90 will be temporarily impacted to install the pipeline below grade. This roadside swale was delineated as part of Wetland E due to the connected hydrology, but this swale is actively used to collect and convey roadside runoff that is then routed into the main portion of Wetland E.

The installation of the force main north of I-90 will use open-cut construction methods once the pipeline resurfaces north of I-90. The pipeline will follow this roadside swale parallel to NW Sammamish Road until the pipeline route turns towards Lake Sammamish. Much of the pipeline in this segment will occur within the road prism at the upper limits of the roadside swale, and thus impacts to critical areas will be minimized and mainly restricted to temporary impacts to accommodate construction.

All equipment will be staged on NW Sammamish Road and all construction during this phase is proposed to occur outside of Wetland E.

6.1.4 Pipeline Connecting Road to Outfall

The force main stretch between NW Sammamish Road and the nearshore outfall will use an open cut installation method through Wetland E. The pipe is expected to be laid approximately three (3) feet below the soil surface before being backfilled by suitable material. Heavy equipment will be necessary during the entire installation. Precautions will be taken to minimize disturbances to the wetland, including soil compaction throughout the wetland and wetland buffer. Precautions include the use of plastic mats, working in the drier summer months, and other BMPs during construction to avoid and minimize potential impacts.

The proposed plastic mats to be used both during construction, as needed, and for maintenance access will be PRO-TEC Equipment AlturnaMATs, or equivalent. These mats are intended to reduce compaction impacts from vehicles driving over sensitive areas. The mats are of high-density polyethylene material featuring a diamond plate tread design and are ½” thick and flexible enough to contour to existing surface conditions, yet strong enough to support 120+ ton vehicles. Mats will be placed over areas with emergent vegetation species so that no impacts to trees or shrubs will result.

Copyright © 2021 Talasaea Consultants, Inc.

Direct vehicular access to the outfall will not be provided post-installation. However, a vehicular access point to the Greenwood Trust Property will be provided to be used for future maintenance on an as-needed basis, where an existing pullout is located. Discussions with City staff have guided decision-making on the exact placement of the vehicular access to the Greenwood Trust Property. It was determined that access will be provided off NW Sammamish Road along the southern edge of Wetland E. This will be a short stubbed road that will primarily allow for access to the site for maintenance vehicles. Based on City feedback, the road will tie into existing grade and incorporate a pervious reinforced turf system (Grasspave2; Detail shown on **Sheet W3.4**) that will be invisible at grade. The system will be installed over 6-inches of crushed rock, filled with topsoil, and seeded with a native grass mix appropriate for occasional maintenance disturbances. The installed system will provide improved slope stability and additional traction for maintenance vehicles during wetter months.

Access to the outfall is assumed to only be necessary for maintenance activities. Maintenance activities will be restricted to summer, dry months to the greatest extent practicable when driving through the wetland is feasible without harm to either soils or vegetation due to the ephemeral nature of hydrology within this wetland. If emergency access to the outfall is necessary during the rainy season when wetland soils are saturated, plastic mats will be used to cover wetland soils and prevent damage to the wetland vegetation and soils. These mats will only be placed as needed for outfall access and will be removed once maintenance activities are complete. The most direct route feasible to connect the access road to the outfall will be used, depending on site-specific conditions when access is required. The intent is that the plastic mats will only be necessary for a short duration. Less than a day is anticipated under all but the most unusual of circumstances, therefore, no damage to plants or soil is expected as a result of periodic maintenance access to the nearshore outfall.

6.1.5 Nearshore Outfall

A submerged lake outfall was previously approved and a State Environmental Policy Act Mitigated Determination of Non-Significance (SEPA MDNS, SEP11-00005) was issued by the City of Issaquah. The conceptual submerged outfall design did not account for the actual bathymetry within this portion of the lake, which was determined to be less favorable from a functional design standpoint. A detailed evaluation of this previously approved submerged lake outfall concept identified the constraints of this outfall design, and alternatives were discussed with the Agencies (**Appendix D**). A Joint Agency Pre-Application meeting was held on 27 February 2019 to discuss the outfall options. Based on recommendations by the stakeholders at this joint Agency meeting, the submerged outfall was discarded in favor of a nearshore outfall structure that would be located 10 feet upslope of the OHWM for Lake Sammamish. This resulted in an outfall design that was less impactful to critical areas than the previously proposed submerged outfall.

The proposed nearshore outfall structure will consist of a bubble-up system that will be placed above the OHWM of the lake consistent with WDFW guidance. Estimated peak flow rates will not exceed 11.6 cfs through this force main based on hydraulic models. The use of a new outfall into Lake Sammamish was previously determined to meet the Level 2 flow control requirements as outlined in the DA with the City of Issaquah. The proposed nearshore outfall configuration was determined to be less impactful to critical areas than the previously proposed submerged lake outfall for the following reasons:

- Bathymetry at the lake at the proposed location would result in a much longer pipe along the lake bottom than anticipated in the conceptual design;
- Coffer Dam has large temporary impacts on sediments;
- Fish screen on the pipe is a nuisance hazard for recreation;

Copyright © 2021 Talasaea Consultants, Inc.

- Maintenance of a submerged outfall is more problematic compared to a land-based outfall; and
- Shifting lakebed sediment would interfere with a submerged outfall.

Standard temporary construction sediment and flow control best management practices (BMPs) will be implemented during the construction of the nearshore outfall.

6.2 Enhanced Stormwater Treatment

The proposed development will not provide additional water quality treatment since no new pollution-generating surfaces are proposed as part of this project. Water quality treatment will be provided by subsequent developments prior to discharge to the proposed pump station. Stormwater will be dispersed appropriately between Tibbetts Creek and the nearshore outfall along Lake Sammamish. This system will effectively manage the risk of flooding over the current configuration.

6.3 Project Alternatives

Federal, State, and local guidelines require avoidance of critical area impacts, followed by minimization of impacts, then compensation for unavoidable impacts in some fashion consistent with the applicable regulations. More details on the mitigation sequencing for this Project are provided below in **Chapter 8.2**. As part of the mitigation sequencing process, the Project was evaluated for alternatives to the preferred option that is outlined in this report.

Evaluation of potential alternatives for the Hyla Crossing force main started several years ago with the submittal of materials that led to the issuance of a SEPA determination. That issued SEPA determination was for the construction of a submerged outfall structure within Lake Sammamish. In the intervening years, additional survey data was collected to be able to more accurately map the bathymetry within Lake Sammamish where the new outfall was proposed. The actual shoreline and lakebed drop-off was significantly more gradual than conceptual profiles previously identified. As a result of this additional survey, it was determined that the submerged outfall would need to be placed approximately 200 feet offshore from the lake OHWM. During the joint Agency pre-application meeting, several Agency staff noted that current state regulations make submerged stormwater outfalls incredibly challenging (to near impossible) to permit due to their invasive nature and high risk for causing impacts to lake resources and wildlife.

Other alternatives were evaluated to consider different locations of the outfall structure and potential use of a dispersion trench. These subsequent alternatives were each discarded for similar reasons – limited suitable area within which to work and challenges finding a viable path through all applicable environmental regulations.

Based on the above evaluations of potential pipeline alignments, different types of outfall structures, and different locations of the outfall structure, the most appropriate location for the proposed project is what is currently reflected as the Project.

CHAPTER 7. IMPACTS OF PROPOSED DEVELOPMENT

7.1 Assessment of Development Impacts

Both permanent and temporary wetland and buffer impacts are necessary to install and manage the pipeline and nearshore outfall (**Sheet W2.0** in **Appendix F**). Direct wetland and buffer impacts are anticipated for reconfiguration of the ROW pullout and for the outfall construction.

The total Project Area is 102,943 sf, of which approximately 804 sf of permanent wetland impacts, 632 sf of permanent wetland buffer impacts, 28,974 sf of temporary wetland impacts, and 33,792 sf of temporary wetland buffer impacts are anticipated for the pipeline and outfall installation. Permanent and temporary impact areas are summarized in **Table 2** below.

Copyright © 2021 Talasaea Consultants, Inc.

Table 2. Summary of Critical Area Impacts

Feature ID	Permanent Wetland Impacts	Permanent Buffer Impacts	Temporary Wetland Impacts	Temporary Buffer Impacts
Wetland A	0	0	0	0
Wetland B	0	0	0	0
Wetland C	0	0	0	0
Wetland D	0	0	0	0
Wetland E – outfall	314 sf	0	0	0
Wetland E – pipeline/ maintenance access	0	0	6,947 sf (pipeline/access trail)[1]	0
Wetland E – Temporary Construction Work Area	0	0	19,828 sf (work area)[1]	0
Wetland E – ROW Pullout	490 sf	632 sf	0	0
Wetland F	0	0	0	0
Tibbetts Creek Wetland	0	0	0	0
NW Sammamish Road Swale (part of Wetland E)	0	0	2199 sf[1]	33,792 sf
Tibbetts Creek	0	0	0	0
Lake Sammamish	0	0	0	0
TOTAL	804 sf	632 sf	28,974 sf	33,792 sf

[1]These three (3) areas of temporary wetland impact are all part of Wetland E, but for different elements of the project.

7.1.1 Pump Station

Construction of the pump station will occur outside of the averaged buffer for Tibbetts Creek that comprises the Northern Enhancement area, as outlined in the DA. In addition to the stream buffer, a 15-foot structure setback is required that is intended to protect existing buffers from the adjacent built environment. However, in this instance, the buffer lacks any native vegetation and soils and will need to be fully restored as part of the mitigation for this Project.

The pump station is proposed within the mapped Tibbetts Creek flood plain. This will require placement of fill within the floodplain to bring the first floor finished elevation to the required 1-foot above the 100-year flood elevation based on the existing 100-year flood elevations at the time of project design. Flood storage compensation is required. Compensatory flood storage and a no-rise study is a requirement of the Flood Hazard Permit and were prepared by Watershed Science and Engineering and KPFF Consulting Engineers, a copy of which has been provided as part of this application.

7.1.2 I-90 Force Main Crossing (Bore)

No impacts to critical areas are anticipated as a result of this utility bore underneath I-90. This includes the construction of the sending pit on the south side of I-90. The receiving pit on the north side of I-90 will temporarily impact Wetland E and its buffer.

Copyright © 2021 Talasaea Consultants, Inc.

7.1.3 NW Sammamish Rd Swale

The Project will be constructed at the edge of the NW Sammamish Road ROW, upslope of the Wetland E delineation. Temporary impacts to the wetland buffer and minor temporary impacts to the Wetland E will result from pipe installation.

7.1.4 Pipeline Connecting Road to Outfall

The portion of the pipeline that connects the segment along NW Sammamish to the new nearshore outfall will cross Wetland E, resulting in permanent and temporary wetland impacts. Additionally, a necessary pullout stub will be constructed for maintenance vehicle access and to ensure NW Sammamish Rd remains unobstructed during routine maintenance events. The pullout stub will tie into the existing grade which will result in permanent impacts to Wetland E.

Permanent wetland impacts for the outfall and the reconfiguration of the ROW pullout are 805 sf and permanent wetland buffer impacts are 632 sf. Individual features are described below:

- Permanent wetland impacts associated with the outfall will be 314 sf.
- Permanent wetland impacts associated with the pullout will be 490 sf.
- Permanent wetland buffer impacts associated with the pullout will be 632 sf.

The majority of the wetland impacts, approximately 62,766 sf (28,974 sf wetland and 33,792 sf wetland buffer), for pipeline installation will be temporary with these areas being restored post-construction. The area over the pipeline will be restored with wetland grass species with plantings of trees and shrubs restricted to a zone beyond the central pipeline location to reduce the risk of root zones negatively impacting the pipe. These areas are currently reed canarygrass, so no conversion of wetland type is proposed over the pipeline. Though, portions of the reed canarygrass will be replaced with shrub and forested species more typical of wetlands in this region.

Temporary wetland impacts are anticipated to accommodate construction activities through Wetland E. Approximately 28,974 sf of wetland and 33,792 sf of buffer will be temporarily impacted. These areas will be restored post-construction. The areas of temporary wetland and buffer impacts are dominated by reed canarygrass and will be restored by decompaction of soils following construction. Mitigation will consist of planting native woody and herbaceous species.

Within the past 10 years, there have been various levels of effort to restore portions of Wetland E by planting native trees and shrubs. Additionally, the City of Issaquah has established a Carbon Credit Area within the Greenwood Trust (Sammamish Cove) parcel. This area consists of a variety of restoration plantings including both coniferous and deciduous species. The proposed pipeline route will not impact the Carbon Credit Area but will result in minor impacts to areas where volunteer groups have planted willow stakes. Based on City comments, the willow stakes that were installed by volunteers were coarsely mapped to approximate the extent and density of plantings where the pipeline route is proposed. Several of the installed willow stakes were determined to be dead, but the current density of rooted stakes was determined to be roughly 10-12 feet on center. Any willow stakes impacted by the proposed pipeline will be replaced at least a 1:1 ratio. The current replacement ratio was calculated based on the 8,274 sf projected area of impact. A final count of willow stakes will occur once erosion and sediment controls have been installed to ensure the most accurate accounting of restoration plantings since additional plantings are anticipated between now and the time of pipeline construction.

Based on City comments, mitigation for impacts to informal volunteer willow plantings will be replaced throughout Wetland E at a higher density (approximately 6 feet on center) than what was recorded. It is estimated that 684 willow stakes will be added in the vicinity of the impacted volunteer plantings.

Copyright © 2021 Talasaea Consultants, Inc.

7.1.5 Lake Sammamish Nearshore Outfall

The nearshore outfall will be placed approximately 10 feet upwards from the OHWM of Lake Sammamish, as directed by WDFW regulations. The location of the outfall was selected to avoid the mature willow trees as much as possible that occur along the lake shoreline. The outfall will consist of a grate inlet bubble-up structure with an aluminum bolt-down grate. 8-inch round rock will be utilized to dissipate energy. The impacts associated with the nearshore outfall have been designed to minimize environmental impacts while still maintaining the intended purpose. This outfall will permanently impact approximately 314 sf of Wetland E for the construction of the outfall itself as well as the energy dissipation pad between the outfall and the OHWM of Lake Sammamish. No work is being proposed below the OHWM of Lake Sammamish, however, work will occur up to the OHWM.

The outfall design is expected to require minimal maintenance. Permanent maintenance access is not provided. Temporary maintenance access is provided through the construction of the stub out along NW Sammamish Road and will require the use of plastic mats through the wetland at any time access to this outfall is required. Detailed documentation on the required maintenance for this outfall structure is provided in the civil-prepared documentation. Visual inspection of the outfall is expected to occur once weekly during the rainy season and after heavy rain events. Truck access via plastic mats is only anticipated during heavy maintenance such as rock or structure replacement or repair. Maintenance activities will be conducted on foot when feasible. Vegetation near the outfall and rock pad will be cleared biannually with hand trimmers.

7.2 Hydrology

No hydrologic impacts are expected to result to Lake Sammamish, Tibbetts Creek, or Wetland E as a result of this Project. Lake Sammamish is the receiving waterbody for regional stormwater for the greater Issaquah area, including the Hyla Crossing neighborhood, and this project will not change that. The stormwater discharges for the Hyla Crossing development flow into Tibbetts Creek in the existing condition. The Project was designed to ensure the future stormwater contributions to Tibbetts Creek will be maintained in a manner supportive of healthy stream hydrology. The project proposes to reduce the rate of stormwater discharge to Tibbetts Creek to achieve compliance with the required flow control standards.

No hydrologic impacts to any wetlands are anticipated as a result of this Project. Trench dams will be placed at regular intervals along the pipeline installed through Wetland E to ensure that the pipeline bedding does not act as a conduit for moving shallow groundwater. Appropriate soils will be used for backfilling the pipeline to ensure the proper installation of the pipeline while reducing impacts of the backfilled soil material on the lateral movement of shallow groundwater through Wetland E.

7.3 Floodplain Impacts

7.3.1 Flood Storage Compensation

The proposed project will require the placement of fill into the Tibbetts Creek 100-year floodplain to accommodate the pump station. However, this project will result in <u>no loss of flood storage</u> once compensatory flood storage is provided in the adjacent compensatory storage area. Watershed Science and Engineering's March 27, 2020 HCPSD Hydraulic Analysis and No-Rise Certification of the proposed compensatory storage and concluded that the project will not result in a rise of the 100-year floodplain.

Regrading is proposed within the Greenwood Trust Property wetland to reconfigure the pullout; however, all proposed regrading is located outside of the 100-year floodplain elevation of 36.00. The force main and outfall structure will be installed with the finished grade matching the

Copyright © 2021 Talasaea Consultants, Inc.

existing grade. The Lake Sammamish 100-year floodplain will not be changed; therefore, compensatory flood storage analysis is not required.

7.3.2 Habitat Impact Assessment

Consistent with IMC Chapter 16.36.120.K.2, the submittal of this report and supporting documentation to the Corps will require an ESA review as part of the Nationwide Permitting process. This Corps-directed ESA review will also serve as the habitat impact assessment, thus requiring no additional review through the City of Issaquah. A copy of the Corps Permit will be provided to the City upon receipt. A Biological Evaluation (BE) will be prepared following the ASDP submittal as part of the Corps permitting process and for subsequent review by the National Marine Fisheries Service (NMFS).

7.4 Assessment of Critical Habitats and Species Impacts

The USFWS and NMFS websites depict Federally-listed and proposed endangered and threatened species along with their associated critical habitat in Western Washington. These websites also indicate the presence of candidate species and species of concern. Also, the WDFW and StreamNet.org maintain databases of fish presence in rivers and streams in the Pacific Northwest.

Standard erosion and sediment control measures will be used during construction to prevent any unintended impacts to the nearby wetlands, streams, or Lake Sammamish. Post-construction conditions are expected to maintain or improve upon the current conditions of Wetland E or Lake Sammamish within the Project Area.

No impacts to listed species are anticipated as a result of this Project. A determination of ***not likely to adversely affect*** (NLAA) Federally-listed species seems appropriate at this time.

CHAPTER 8. PROPOSED MITIGATION

8.1 Agency Policies and Guidance

Mitigation for all critical area impacts must adhere to the policies and guidance for compensatory mitigation provided in the following documents:

- Issaquah Municipal Code, Chapter 18.10 -- Critical Areas;
- The Washington State Department of Ecology (DOE) Publication #06-06-011a, Wetland Mitigation in Washington State – Part 1: Agency Policies and Guidance (Version 1, March 2006), and DOE Publication #06-06-011b, Wetland Mitigation in Washington State – Part 2: Developing Mitigation Plans (Version 1, March 2006); and
- The Federal Compensatory Mitigation for Losses of Aquatic Resources Final Rule (33 CFR Parts 325 and 332, April 10, 2008), effective June 9, 2008.

The proposed mitigation plan is in accordance with IMC 18.10.720 Mitigating for wetland impacts. Mitigation sequencing was designed in accordance with the policies and guidance provided in WAC 173-26-201(2)(e) and IMC 18.10.490, per the Issaquah SMP Chapter 5.6.2.1.

Wetlands on the Site are subject to applicable State and Federal regulations. Wetland impacts are regulated at the Federal level by Sections 404 and 401 of the Clean Water Act. The US Army Corps of Engineers (USACE) is responsible for administering compliance with Section 404 via the issuance of Nationwide or Individual Permits for any fill or dredging activities within wetlands under Corps jurisdiction. Any project that is subject to Section 404 permitting is also required to comply with Section 401 Water Quality Certification, which is administered by the Washington State Department of Ecology (DOE).

Copyright © 2021 Talasaea Consultants, Inc.

8.2 Mitigation Sequencing

The demonstration of mitigation sequencing is required for approval of any site development plan that will impact critical areas or their associated buffers. Mitigation sequencing is described in IMC 18.10.490, which states:

Mitigation Sequence: Activities and development on sites containing critical areas shall follow the sequence of steps listed below in order of priority to further the goal of no net loss of ecological functions of environmental critical areas:

1. *Avoid impacts altogether by not taking a certain action or parts of an action;*
2. *Minimize impacts by limiting the degree or magnitude of the action and its implementation by using appropriate technology, or by taking affirmative steps to avoid or reduce impacts;*
3. *Rectify impacts by repairing, rehabilitating or restoring the affected environment;*
4. *Compensate for the impact by replacing, restoring, creating, enhancing or providing substitute resources or environments;*
5. *Monitor the impact and the compensation projects and taking appropriate corrective measures.*

Avoiding Impacts: The proposed site development plan has been designed to avoid impacts to Wetland E to the maximum extent practicable. Impacts to other wetlands and streams have been completely avoided. Wetland and priority upland impacts were generally avoided by proposing the pipeline route in the already disturbed NW Sammamish Rd Swale. Where critical area impacts could not be avoided, impacts were then minimized to the greatest extent possible.

Minimizing Impacts: The proposed site development plan reflects the minimum amount of impacts necessary to provide an economically viable development. The proposed Project Area was designed to minimize critical area impacts by directing the pipeline through areas already disturbed. Permanent impacts have been restricted to the outfall structure and maintenance access stub out, thus allowing for full restoration of the remainder of the project area. Construction BMPs will be implemented to minimize soil compaction during construction, hydrologic disruptions due to the installed pipeline and backfill soils used, and sedimentation to the adjacent wetland and waterbodies.

Rectifying Impacts: All temporary impacts to Wetland E and its buffer will be restored.

Compensating for Impacts: Compensation for temporary wetland and buffer impacts will be mitigated through a combination of wetland and wetland buffer restoration and enhancement. Compensation for permanent wetland and buffer impacts will be provided through the purchase of credits at the Keller Farm Mitigation Bank at an approved ratio of 1:1 for Category III wetlands. While wetland creation is preferred per the IMC for the City, the Corps and WDOE require the use of mitigation banks over Permittee Responsible mitigation except where strong arguments support a different approach. Given the extensive wetlands already near the Project Area, and the proximity of the Keller Farm Mitigation Bank, it was determined that the mitigation bank was the best option to offset permanent wetland impacts.

Monitoring for Impacts: A monitoring program and contingency plan is provided in this report for the wetland restoration and enhancement areas that details the goals, objectives, and performance standards. The plan provides the post-construction performance monitoring schedule, including monitoring methods that will be used to evaluate the approved performance standards, as required under IMC 18.10.500.

Copyright © 2021 Talasaea Consultants, Inc.

8.3 Mitigation Site Selection

The regulatory agency policies for the preferred type and location of compensatory mitigation differ in hierarchy between the agencies. The City of Issaquah under IMC §18.10.720 prefers the following site selection for location and timing of mitigation:

H. Location:

1. On-site compensation shall be provided except where the applicant can demonstrate that:
2. Off-site compensation shall occur within the same watershed as the wetland loss occurred.
3. In selecting compensation sites, applicants shall pursue siting in areas conducive to wetland creation, enhancement, or restoration based on recommendations of a wetland biologist and approved by the City.

I. Wetland Mitigation Banking: The City may consider and approve replacement or enhancement of unavoidable adverse impacts to wetlands caused by development activities through an approved wetland mitigation bank, in advance of authorized impacts. Criteria governing the creation and use of a mitigation bank shall be established in administrative rules.

The Corps preferred sequence of mitigation site selection is as follows:

1. Mitigation bank credits;
2. In-lieu fee program credits;
3. Permittee responsible mitigation under a watershed approach;
4. Permittee responsible mitigation on-site and in-kind; or
5. Permittee responsible mitigation off-site and out-of-kind.

The City of Issaquah, under IMC §18.10.720(I) will consider the use of an approved wetland mitigation bank using criteria established in administrative rules. It is our understanding that there are no administrative rules currently in effect. Additionally, the city does not have an allowance under their current code for the use of an In-lieu Fee program, such as the King County In-lieu Fee program, as well. Both the use of a wetland mitigation bank or an in-lieu fee program are the preferred methods for wetland impacts for the Federal Army Corps of Engineers.

The fundamental objective of the proposed compensatory mitigation plan is to offset environmental losses resulting from unavoidable impacts to waters of the U.S. Based upon the guidance in the above documents, all proposed mitigation shall be based on best available science and shall demonstrate no net loss of critical area functions and values.

8.4 Proposed Mitigation

To mitigate for permanent wetland and buffer impacts, we are proposing purchasing credits at the Keller Farm Mitigation Bank recently approved by the Interagency Review Team in December 2019. The purchase of credits through an approved mitigation bank is the preferred method of compensatory mitigation for federal agencies and will likely have a higher rate of success when compared to on-site wetland creation.

To mitigate for temporary wetland and buffer impacts for the pipeline construction, restoration is proposed. To mitigate for floodplain impacts, compensatory flood storage will be provided adjacent to the pump station in the averaged buffer for Tibbetts Creek. Because the compensatory flood storage is located in the Tibbetts Creek Buffer, and as a future requirement of the DA between Rowley Properties, Inc. and the City of Issaquah, 0.6 acres of the Tibbetts Creek buffer will also be restored as part of this project. Mitigation will include replacing existing

Copyright © 2021 Talasaea Consultants, Inc.

impervious surface area with native soils and vegetation. A soft-surface trail is also proposed in the outer 25% of the stream buffer that connects to a recently constructed boardwalk south of the Project Area as part of a regional trail system.

Therefore, final mitigation proposed for the Hyla Crossing Pumped Stormwater Discharge Project are as follows:

- Purchase credits at the KFMB for permanent wetland impacts;
- Restore 28,974 sf of temporary impacts to Wetland E;
- Restore 33,792 sf of temporary impacts to Wetland E buffer;
- Restore 26,154 sf of Tibbetts Creek buffer for both compensatory flood storage and previously agreed upon restoration of the Northern Enhancement area per the DA

8.5 Mitigation Bank Credits

The project is within the service area of the Keller Farm Mitigation Bank (KFMB). This bank can provide the necessary compensatory mitigation in the form of mitigation bank credits to replace the functions and values lost by impacting Wetland E and its buffer. Coordination between KFMB and the City of Issaquah will ensure that credits purchased at the bank will adequately cover the mitigation requirements for on-site impacts. The Mitigation Banking Instrument (MBI) for KFMB provides guidance in determining the value of bank credits as a function of required mitigation ratios. Purchasing credits at a mitigation bank is an ideal mitigation solution for this project since the resulting mitigation area will provide higher levels of habitat function, and the operating structure of a mitigation bank ensures that all areas of mitigation will be monitored and maintained in perpetuity.

Mitigation required for the permanent impacts to Wetland E and its buffer will be provided by purchasing credits at KFMB using the Credits per Unit Impact ratios provided in the KFMB's Mitigation Banking Instrument (**Table 3**). A Mitigation Bank Credit is not a quantitative equivalent to the mitigation requirements for the City of Issaquah (i.e., one Mitigation Bank Credit does not purchase one acre of the mitigation bank). A credit represents a functional, or qualitative, equivalence to the proposed impacted resource and includes wetland creation/rehabilitation, associated critical areas buffer enhancements, and maintenance/monitoring costs associated with mitigation. Using KFMB for mitigation purposes requires that the Credits per Unit Impact ratio of the bank, as defined by the MBI, be used regardless of the mitigation requirements of the City of Issaquah. Units of impacts for wetlands are expressed in terms of acres. **Table 3** below describes the credit purchase ratios for KFMB.

Table 3. Keller Farm Mitigation Bank Credit Purchasing Ratios

Permanent Resource Impact	Credit to Impact Ratio
Wetland, Category I	Case by case
Wetland, Category II	1.2 to 1
Wetland, Category III	1.0 to 1
Wetland, Category IV	0.85 to 1
Critical Area Buffer	0.3 to 1
Stream	Case by case

A general bank use guidance document for the KFMB can be found in **Appendix E**. The guidelines contained in this document will be followed when determining the appropriate number of credits for mitigation bank compensation.

Copyright © 2021 Talasaea Consultants, Inc.

8.6 Mitigation Bank Benefits

The Washington Department of Ecology, by order of the State Legislature, has developed a set of draft mitigation banking regulations. The Legislature authorized DOE to start a mitigation bank pilot program to evaluate the draft rules. Many Federal, State, and local agencies recognize that mitigation banking can benefit the aquatic ecosystem, as well as permit applicants, regulatory and natural resource agencies, and the general public. To further promote the benefits of mitigation banking in meeting the "No Net Loss" policy of protecting wetlands, the US Army Corps of Engineers and the US Environmental Protection Agency issued a new rule on compensatory mitigation ("Compensatory Mitigation for Losses to Aquatic Resources", April 2008) prioritizing the use of mitigation bank credits for unavoidable impacts to aquatic resources.

Mitigation banks provide a financially and ecologically effective method for mitigating unavoidable impacts to aquatic resources. Mitigation banks are designed, monitored, and maintained through site-specific MBIs. The MBI provides a framework for the types of aquatic resources to be created or restored and specific performance standards that must be met. Performance standards include wetland hydrology, function, vegetative habitats, wildlife habitats, control of invasive species, and financial assurances for operation and protection in perpetuity. Banking credits are released as performance standards are met.

Ecological benefits of a mitigation bank are derived through the scale of the mitigation, the variety of habitats being created, the relatively high quality of habitats being created, the long-term monitoring and maintenance of the bank, and the permanent protection of the bank. An additional feature is that restoration or creation often has already occurred and is maturing before the credits are sold to a particular project. The large size of a mitigation bank also ensures connectivity between habitat types (wetland, stream, lakes-ponds, and upland) for wildlife.

By contrast, individual mitigations on development sites are typically much smaller, provide less habitat functioning and habitat types, and have severely time-limited maintenance and monitoring when compared to a mitigation bank. Development around critical areas disconnects the critical area from other habitat areas (wetlands or uplands), reducing the availability of that habitat to wildlife, while limiting the ability of wildlife existing in the wetland to migrate between habitat areas.

8.7 Wetland and Buffer Restoration

All temporary construction impacts will be fully restored following construction of the pipeline and outfall (**Sheet W3.0 and Sheet W3.1** in **Appendix F**). Soils will be restored and all areas will be planted with native species.

8.8 Floodplain Habitat and Storage Mitigation

Compensatory floodplain storage will be provided to mitigate for all fill material added to the Tibbetts Creek floodplain during the construction of the pump station. Regrading is proposed within the Greenwood Trust Property wetland to reconfigure the access pullout; however, all proposed regrading is located outside of the 100-year floodplain elevation of 36.00. Therefore, no compensatory floodplain storage in this area is not provided. Because the compensatory flood storage is located in the Tibbetts Creek Buffer, and as a requirement of the DA between Rowley Properties, Inc. and the City of Issaquah, 0.6 acres of the Tibbetts Creek buffer will be restored as part of this project (**Sheet W3.2** in **Appendix F**).

8.9 Mitigation Design Elements

The goal of the mitigation design is to restore critical area function from temporary and permanent impacts. Below is a description of how this will be accomplished while meeting the design concepts described in **Chapter 6** above.

Copyright © 2021 Talasaea Consultants, Inc.

8.9.1 Removal of Non-native, Invasive Plant Species

Wetland E, near the proposed impact area, consists largely of reed canarygrass and Himalayan blackberry. Several ongoing restoration efforts are in place across the parcels, however, the invasive species are a significant problem for species diversity and habitat. The proposed mitigation plan will remove these non-native, invasive species and will aggressively control them throughout the required monitoring period to prevent their re-establishment.

8.9.2 Restoration Planting

Portions of Wetland E will be restored and enhanced by planting a variety of native trees, shrubs, and emergent vegetation. The goal of the mitigation planting plan is to increase the habitat services and values provided by Wetland E and its associated buffer. By extension, the enhancement and restoration planting proposed for Wetland E and its buffer will provide a beneficial habitat functional improvement for Wetland E (lake fringe wetland) and Lake Sammamish adjacent to the Project Area. The area is currently a monoculture of reed canarygrass providing limited wetland functions and values.

Based on City comments, mitigation for impacts to informal volunteer willow plantings will be replaced throughout Wetland E at a higher density (approximately 6 feet on center) than what was recorded. It is estimated that 684 willow stakes will be added in the vicinity of the impacted volunteer plantings. The area and quantity of willow stakes are shown on **Sheet W3.4**.

8.9.3 Planting Plan

Plant species were chosen for a variety of qualities, including: adaptation to specific water regimes, value to wildlife, value as a physical or visual barrier, patterns of growth (structural diversity), shading of the stream channel, and aesthetic values. Native tree, shrub, and herbaceous species were chosen to increase both the structural and species diversity of the mitigation areas, thereby increasing the value of the area to wildlife for food and cover. See **Sheets W3.0 - W3.2 in Appendix F** for planting layouts. **Sheet W3.3 and Sheet W3.4** provide a detailed plant schedule, density tables, and details.

We expect that seeds and berries from adjacent native species will be recruited by natural forces (wind, rain, birds) into the mitigation areas and will assist in achieving the performance standards for species diversity and cover. The performance standards limit the percentage cover of any single species of tree or shrub in the mitigation area. If a single native species becomes too prolific in naturally establishing itself in the mitigation area, its coverage will be reduced as required by the performance standards.

8.9.4 Temporary Irrigation

An above-ground temporary irrigation system, capable of full head-to-head coverage will be provided within the 0.6-acre Tibbetts Creek buffer restoration area. The temporary irrigation system shall either utilize controller and point of connection (POC) from the site irrigation system or shall include a separate POC and controller with a backflow prevention device per water jurisdiction inspection and approval. The system shall be zoned to provide optimal pressure and uniformity of coverage. The system shall be operational by June 15 (or at the time of planting) and winterized by October 15. Irrigation shall be provided for the first 2 years of the monitoring period. The irrigation system shall be programmed to provide 1/2-inch of water two times per week (one cycle with two start times per week or every three days). No irrigation will be provided for the mitigation areas associated with the pipeline route. These plantings have been selected to be drought-tolerant with minimal supplemental requirements.

8.9.5 Mitigation Goals

The primary goal of the mitigation plan offset permanent wetland and buffer impacts by purchasing credits at the Keller Farm Mitigation Bank. The secondary goal is to restore all

Copyright © 2021 Talasaea Consultants, Inc.

temporary construction impacts after the pipeline is completed. To accomplish these goals, the proposed project will:

- Purchase credits at the KFMB for permanent wetland and buffer impacts;
- Restore 28,974 sf of temporary impacts to Wetland E;
- Restore 33,792 sf of temporary impacts to Wetland E buffer;
- Restore 26,154 sf of Tibbetts Creek buffer for both compensatory flood storage and previously agreed upon restoration per the DA

Mitigation objectives and performance standards will be provided upon receipt of preliminary agency comments. See **Section 10.2** for a full description of the monitoring methods that will be used to evaluate the approved performance standards. Mitigation monitoring will be performed by a qualified biologist.

CHAPTER 9. CONSTRUCTION SEQUENCING

9.1 Mitigation Construction Sequence

The following provides the general sequence of activities anticipated to be necessary to complete this mitigation project. Some of these activities may be conducted concurrently as the project progresses.

1. Conduct a site meeting between the Contractor, Talasaea Consultants, and the Owner's Representative to review the project plans, work areas, staging/stockpile areas, and material disposal areas.
2. Survey clearing/grading limits.
3. Flag existing trees and other vegetation near construction limits to ensure no unintentional damage occurs.
4. Install silt fencing, tree protection fencing (if required), and any other erosion and sedimentation control BMPs necessary for work in the project areas.
5. Complete installation of pipeline and other project elements.
6. Grub out invasive species in temporary wetland and wetland buffer impact areas simultaneously during installation.
7. Place topsoil or soil amendments as required.
8. Mulch all graded wetlands and wetland buffers impacted.
9. Construct maintenance access trail to access the outfall location.
10. Complete site cleanup and install plant material as indicated on the planting plan.

9.2 Post-Construction Approval

Talasaea Consultants shall notify the permitting agencies (Corps, WDFW, WDOE, and the City of Issaquah) when the mitigation planting is completed for a final site inspection and subsequent final approval. Once final approval is obtained in writing, the monitoring period will begin.

9.3 Post-Construction Assessment

Once construction is approved, a qualified wetland ecologist from Talasaea Consultants shall conduct a post-construction assessment. The purpose of this assessment will be to establish baseline conditions at Year 0 of the required monitoring period. A Baseline Assessment report including “as-built” drawings will be submitted to all of the required agencies. The as-built plan set will identify and describe any changes in grading, planting, or other constructed features in relation to the original approved plan.

CHAPTER 10.MONITORING PLAN

Performance monitoring of the mitigation areas will be conducted according to all applicable code/regulatory requirements and permit conditions. Monitoring will be conducted according to IMC 18.10.500 for a minimum of five (5) years for the City of Issaquah (City) and 10 years for

Copyright © 2021 Talasaea Consultants, Inc.

the Army Corps of Engineers (Corps). Monitoring will be conducted according to the schedule presented in **Table 4** below, and will be performed by a qualified biologist or ecologist from Talasaea Consultants, Inc.

Table 4. Projected Schedule for Performance Monitoring and Maintenance Events

Year	Date	Maintenance Review	Performance Monitoring	Report Due to Agencies
Year 0, As-built and Baseline Assessment	Fall	X	X	X
1	Spring	X	X	
	Fall	X	X	X
2	Spring	X	X	
	Fall	X	X	X
3	Spring	X		
	Fall	X	X	X
4	Spring	X		
	Fall	X	X	
5	Spring	X		
	Fall	X	X	X*
6	Spring	X		
	Fall			
7	Spring	X		
	Fall		X	X*
8	Spring	X		
	Fall			
9	Spring	X		
	Fall			
10	Spring	X		
	Fall	X	X	X**

*Obtain final approval to facilitate bond release from the City (presumes performance criteria are met).
**Obtain final approval from the Corps (presumes performance criteria are met).

10.1 Reports

The reports will include: 1) Project Overview, 2) Mitigation Requirements, 3) Summary Data, 4) Maps and Plans, and 5) Conclusions. If the performance criteria are met, monitoring for the City will cease at the end of year five, unless objectives are met at an earlier date and the City accepts the mitigation project as successfully completed.

10.2 Monitoring Methods

Vegetation monitoring methods may include counts; photo-points; random sampling; sampling plots, quadrats, or transects; stem density; visual inspection; and/or other methods deemed appropriate by the City and the biologist/ecologist. Vegetation monitoring components shall include general appearance, health, mortality, colonization rates, percent cover, percent survival, volunteer plant species, and invasive weed cover.

Permanent vegetation sampling plots, quadrats, and/or transects will be established at selected locations to adequately sample and represent all of the plant communities within the mitigation project areas. The number, exact size, and location of transects, sampling plots, and quadrats will be determined at the time of the baseline assessment.

Percent areal cover of woody vegetation (forested and/or scrub-shrub plant communities) will be evaluated through the use of point-intercept sampling methodology. Using this methodology, a tape will be extended between two permanent markers at each end of an established transect.

Copyright © 2021 Talasaea Consultants, Inc.

Trees and shrubs intercepted by the tape will be identified, and the intercept distance recorded. Percent cover by species will then be calculated by adding the intercept distances and expressing them as a total proportion of the tape length.

The established vegetation sampling locations will be monitored and compared to the baseline data during each performance monitoring event to aid in determining the success of plant establishment. Percent survival of shrubs and trees will be evaluated in a 10-foot-wide strip along each established transect. The species and location of all shrubs and trees within this area will be recorded at the time of the baseline assessment and will be evaluated during each monitoring event to determine percent survival.

10.3 Photo Documentation

Locations will be established within the mitigation areas from which panoramic photographs will be taken throughout the monitoring period. These photographs will document general appearance and relative changes within the plant communities. A review of photos over time will provide a semi-quantitative representation of the success of the planting plan. Vegetation sampling plots and photo-point locations will be shown on a map and submitted with the baseline assessment report and yearly performance monitoring reports.

10.4 Water Quality and Site Stability

Water quality will be assessed qualitatively unless it is evident that there is a serious problem. In such an event, water quality samples will be taken and analyzed in a laboratory for suspected parameters. Qualitative assessments of water quality include:

- oil sheen or other surface films,
- abnormal color or odor of water,
- stressed or dead vegetation or aquatic fauna,
- turbidity, and
- absence of aquatic fauna.

Observations will be made of the general stability of soils in the mitigation areas during each monitoring event. Any erosion of soils or soil slumping will be recorded and corrective measures will be taken.

CHAPTER 11.MAINTENANCE AND CONTINGENCY

Regular maintenance reviews will be performed according to the schedule presented in **Table 4** to address any conditions that could jeopardize the success of the mitigation project. Following maintenance reviews by the biologist or ecologist, required maintenance on the site will be implemented within ten (10) business days of submission of a maintenance memo to the maintenance contractor and permittee.

Established performance standards for the project will be compared to the yearly monitoring results to judge the success of the mitigation. If during the course of the monitoring period, there appears to be a significant problem with achieving the performance standards, the permittee shall work with the City and other permitting agencies to develop a Contingency Plan in order to get the project back into compliance with the performance standards. Contingency plans can include, but are not limited to, the following actions: additional plant installation, erosion control, bank stabilization, modifications to hydrology, and plant substitutions of type, size, quantity, and/or location. If required, a Contingency Plan shall be submitted to the City by December 31st of any year when deficiencies are discovered.

Copyright © 2021 Talasaea Consultants, Inc.

The following list includes examples of maintenance (M) and contingency (C) actions that may be implemented over the duration of the monitoring period. This list is not intended to be exhaustive, and other actions may be implemented as deemed necessary.

- During year one, replace all dead woody plant material (M).
- The irrigation system shall be programmed to provide 1/2-inch of water two times per week (one cycle with two start times per week or every three days) between June 15 – October 15 during the first two years after installation, and for the first two years after any replacement plantings (C & M).
- Replace dead plants with the same species or a substitute that meets mitigation plan goals and objectives, subject to Talasaea and agency approval (C).
- Re-plant area after the reason for failure has been identified (e.g., moisture regime, poor plant stock, disease, shade/sun conditions, wildlife damage, etc.) (C).
- After consulting with City staff and other permitting agencies, minor excavations, if deemed to be more beneficial to the existing conditions than currently exists, will be made to correct surface drainage patterns (C).
- Remove/control weedy or exotic invasive plants (e.g., Scot's broom, reed canarygrass, Himalayan blackberry, purple loosestrife, Japanese knotweed, etc.) by manual or chemical means approved by permitting agencies. Use of herbicides or pesticides within the mitigation area would only be implemented if other measures failed or were considered unlikely to be successful and would require prior agency approval. All non-native vegetation must be removed and disposed of off-site. (C & M).
- Weed all trees and shrubs to the dripline and provide 3-inch deep mulch rings 24 inches in diameter for shrubs and 36 inches in diameter for trees (M).
- Remove trash and other debris from the mitigation areas twice a year (M).
- Selectively prune woody plants at the direction of Talasaea Consultants to meet the mitigation plan's goal and objectives (e.g., thinning and removal of dead or diseased portions of trees/shrubs) (M).
- Repair or replace damaged structures including signs and fencing (M).

CHAPTER 12.MITIGATION SITE PROTECTIONS

Mitigation Site protections will be provided through several actions, as required by the DA and IMC, including placement of permanent survey markers, placement of the Mitigation Site into either a separate tract or conservation easement, and payment of a financial guarantee to the City.

The outer extent of the critical area buffer and building setback line will be clearly marked in the field with permanent survey markers. In addition to the permanent survey markers after construction is complete, temporary protections must be used before and during construction activities. Lastly, critical area signage is required where trails enter critical areas.

The DA requires that large critical areas be placed into tracts, while smaller critical areas will be placed into easements. However, no definitive size threshold is provided within the DA. The Designated Official at the City has the discretion to select whether a tract or an easement will be used.

DA, Appendix J, Section 13 outlines the requirements for bonds relating to mitigation activities. The DA requirements for performance bonds are consistent with IMC 18.10.490.D in that a bond shall be equal to 150 percent of the estimated cost of the mitigation project. However, Section 13 notes that a maintenance and monitoring bond is required equal to 50 percent of the estimated maintenance and monitoring costs for a period of five (5) years. This deviates from the current IMC.

Copyright © 2021 Talasaea Consultants, Inc.

CHAPTER 13.SUMMARY

This report is the result of a critical areas study for the Hyla Crossing Pumped Stormwater Discharge Project Area. The Project is a linear utility that will construct a new force main (pipeline) starting at a new pump station south of Interstate 90 (I-90) and ending at a nearshore outfall to Lake Sammamish. The Project Area crosses several ownerships including Applicant-owned property, Sammamish Cove Park (City-owned property), and several existing rights-of-way, including for I-90.

Hyla Crossing is an assemblage of already developed parcels on the south side of I-90. Before redevelopment is possible, engineered flow control must be implemented as part of the stormwater runoff design. The project proposes to construct a regional pump station, pipeline, and nearshore outfall to reduce the risk of flooding and eliminate the need for multiple individual detention systems and pump stations in the area. The proposed pipeline will start at the new pump station and end at the new outfall adjacent to Lake Sammamish. The future redevelopment is outlined in the Rowley Development Agreement and the Hyla Crossing Master Drainage Plan.

Both permanent and temporary critical area impacts will occur between the proposed pump station and the nearshore outfall at Lake Sammamish. Permanent impacts to Wetland E include the new outfall structure, recontouring the existing pullout, and a 10-foot maintenance access over the proposed pipeline between NW Sammamish Road and the new outfall. Tibbetts Creek floodplain impacts will occur for the construction of the pump station south of I-90. Total permanent wetland and buffer impacts will be 1,436 sf. 62,766 sf of temporary wetland and buffer impacts are anticipated to accommodate construction access and workspace during installation of the outfall and pipeline.

To mitigate for permanent wetland and buffer impacts, we are proposing purchasing credits at the Keller Farm Mitigation Bank (KFMB) recently approved by the Interagency Review Team (IRT) in December 2019. The service area of the bank includes the project area and is a viable alternative to wetland creation requirements if the City determines it to be an appropriate substitution.

To mitigate for temporary wetland and buffer impacts, restoration is proposed. To mitigate for floodplain impacts, compensatory flood storage will be provided adjacent to the pump station in the buffer for Tibbetts Creek. Because the compensatory flood storage is located in the Tibbetts Creek Buffer, and as a requirement of the DA between Rowley Properties, Inc. and the City of Issaquah, 0.6 acres of the Tibbetts Creek buffer will be restored as part of this project. A soft-surface trail (NTE 14') and small natural seating areas will be installed in the outer 25% of the averaged Tibbetts Creek buffer per Appendix D 3.B of the DA. The trail will connect with the 19th Avenue NW walking path and the newly installed boardwalk through Tibbetts Creek Greenway.

Restoration areas will be monitored for a minimum of five (5) years for the City of Issaquah (City) and 10 years for the Army Corps of Engineers (Corps).

Copyright © 2021 Talasaea Consultants, Inc.

CHAPTER 14. REFERENCES

City of Issaquah. 2019. *City of Issaquah Environmental Protection Chapter 18.10.* Code Publishing Company.

City of Issaquah. 2019. *City of Issaquah Shoreline Master Program.* Accessed 2019. https://www.issaquahwa.gov/index.aspx?nid=2958

Cowardin, Lewis M., Virginia Carter, Francis C. Golet, and Edward T. LaRoe. 1979. *Classification of Wetlands and Deepwater Habitats of the United States.* Washington, DC: U.S. Department of the Interior, Fish and Wildlife Service.

Google Earth. 2019. *Google Earth*. Accessed 2019. https://www.google.com/earth/.

Hitchcock, C. Leo, Arthur Cronquist, Marion Owensby, and J. W. Thompson. 1969. *Vascular Plants of the Pacific Northwest.* Seattle: University of Washington Press.

Hruby, T. 2014. *Washington State Wetland Rating System for Western Washington: 2014 Update (Publication #14-06-029).* Olympia: Washington Department of Ecology.

King County Department of Natural Resources and Parks. 2016. *King County, Washington Surface Water Design Manual.* Manual, Seattle: King County.

Lichvar, R.W. 2012. *The National Wetland Plant List.* ERDC/CRREL TR-12-11, Hanover, NH: U.S. Army Corps of Engineers, Cold Regions Research and Engineering Laboratory. http://acwc.sdp.sirsi.net/client/search/asset:asset?t:ac=$N/1012381.

Natural Resources Conservation Service. 2019. *National Technical Committee for Hydric Soils - Hydric Soils List*. Accessed August 2019. http://www.nrcs.usda.gov/wps/portal/nrcs/main/soils/use/hydric/.

Soil Survey Staff, Natural Resources Conservation Service, United States Department of Agriculture. Web Soil Survey. Available online at https://websoilsurvey.sc.egov.usda.gov/. Accessed [January, 2019].

StreamNet. 2019. "StreamNet Mapper." *StreamNet.* Accessed August 2019. http://map.streamnet.org/website/bluesnetmapper/viewer.htm.

U.S. Army Corps of Engineers. *Regional Supplement to the Corps of Engineers Wetland Delineation Manual: Western Mountains, Valleys, and Coast Region (Version 2.0).* Final Report, U. S. Army Corps of Engineers, Wetlands Regulatory Assistance Program, 2010.

U.S. Army Corps of Engineers 2016. National Wetland Plant List, version 3.3. http://wetland_plants.usace.army.mil/. U.S. Army Corps of Engineers Engineer Research and Development Center Cold Regions Research and Engineering Laboratory, Hanover, NH

U.S. Fish and Wildlife Service. *National Wetland Inventory, Wetlands Online Mapper.* 2019. http://wetlandsfws.er.usgs.gov/wtlnds/launch.html. Accessed [January, 2019].

WA Department of Ecology. *Water Quality Atlas.* 2019. https://fortress.wa.gov/ecy/waterqualityatlas/StartPage.aspx. Accessed [January, 2019].

Washington State Department of Fish and Wildlife. "Priority Habitats and Species Database." 2019. http://apps.wdfw.wa.gov/phsontheweb/. Accessed [January, 2019].

Copyright © 2021 Talasaea Consultants, Inc.

FIGURES

Copyright © 2021 Talasaea Consultants, Inc.

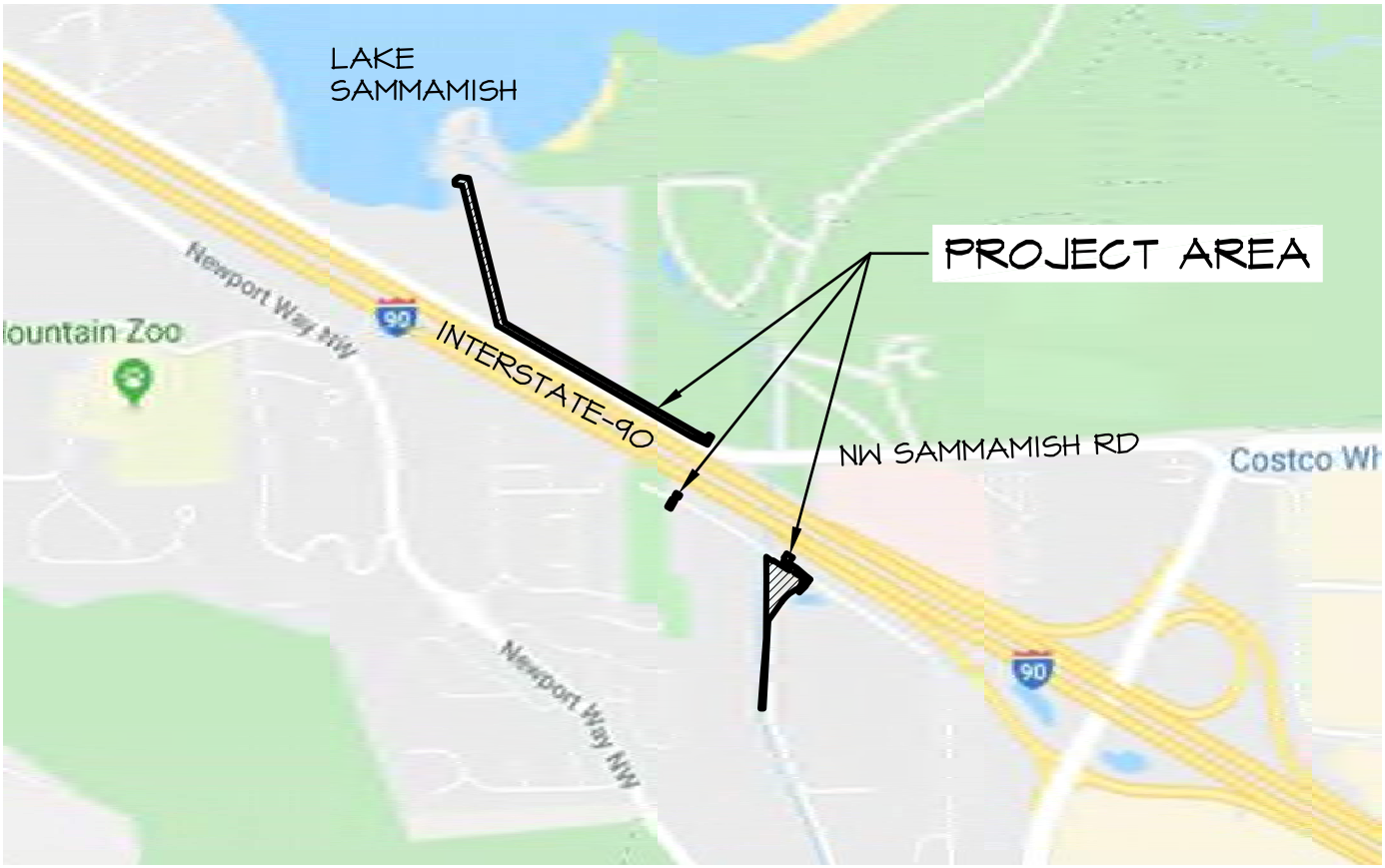

IMAGE SOURCE: GOOGLE MAPS, WWW.MAPS.GOOGLE.COM (ACCESSED 7 OCT 2019)

DRIVING DIRECTIONS:

1. LEAVING FROM ISSAQUAH CITY HALL. HEAD EAST ON EAST SUNSET WAY TOWARD 2ND AVENUE NORTHEAST.
2. USE THE LEFT 2 LANDS TO TURN LEFT TO MERGE ONTO I-90 WEST.
3. TAKE EXIT 15 TOWARD WA-900 WEST/RENTON.
4. TURN RIGHT ONTO 17TH AVENUE NORTHWEST.
5. TURN LEFT ONTO NW SAMMAMISH ROAD.
6. ARRIVE AT DESTINATION:

5230 NW SAMMAMISH ROAD,
ISSAQUAH, WASHINGTON 98027

NORTH

TALASAEA
CONSULTANTS, INC.
Resource & Environmental Planning
15020 Bear Creek Road Northeast
Woodinville, Washington 98077
Bus (425)861-7550 - Fax (425)861-7549

FIGURE #1
VICINITY MAP

HYLA CROSSING PUMPED
STORMWATER DISCHARGE
ISSAQUAH, WA

DESIGN	DRAWN	PROJECT
AO	FH	1775
SCALE N.T.S.		
DATE 4-1-2020		1
REVISED		

Z:\DRAWING\1700-1799\TAL1775\Plans\TAL-1775 Figures 2020-03.dwg

© Copyright - Talasaea Consultants, INC.

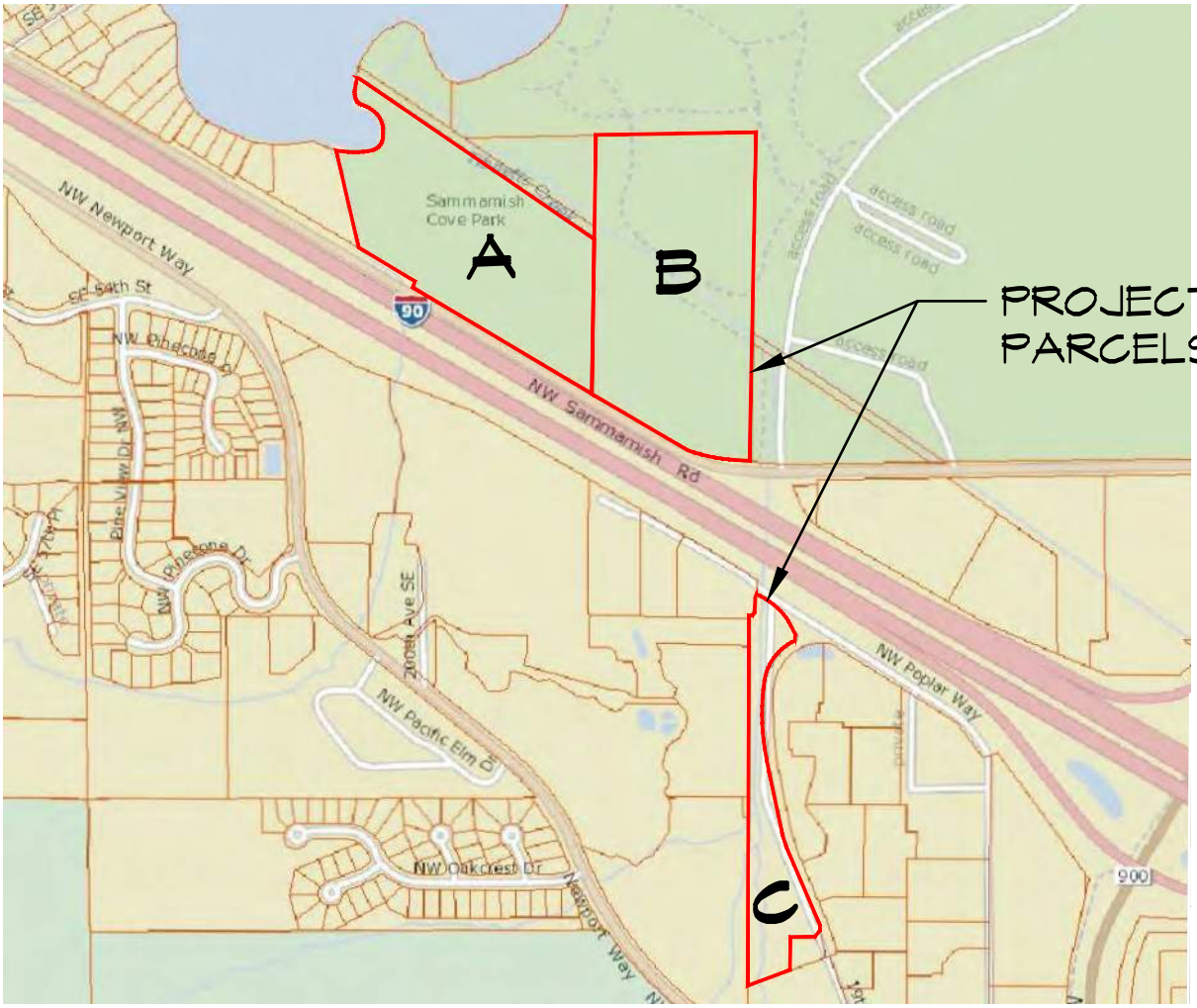

IMAGE SOURCE: KING COUNTY IMAP;
HTTP://WWW5.KINGCOUNTY.GOV/IMAP/VIEWER.HTM?MAPSET=KCPROPERTY
(ACCESSED 7 OCT 2019)

KEY	PARCEL
A	2024069070
B	2024069079
C	356000140

NORTH
N.T.S.

TALASAEA CONSULTANTS, INC.
Resource & Environmental Planning
15020 Bear Creek Road Northeast
Woodinville, Washington 98077
Bus (425)861-7550 - Fax (425)861-7549

FIGURE # 2
PARCEL MAP

HYLA CROSSING PUMPED STORMWATER DISCHARGE
ISSAQUAH, WA

DESIGN	DRAWN	PROJECT
AO	FH	1775
SCALE N.T.S.		
DATE 4-1-2020		2
REVISED		

Z:\DRAWING\1700-1799\TAL1775\Plans\TAL-1775 Figures 2020-03.dwg

© Copyright - Talasaea Consultants, INC.

NW ¼ SE 1/4, SECT. 20, T24N, R6E, W.M.

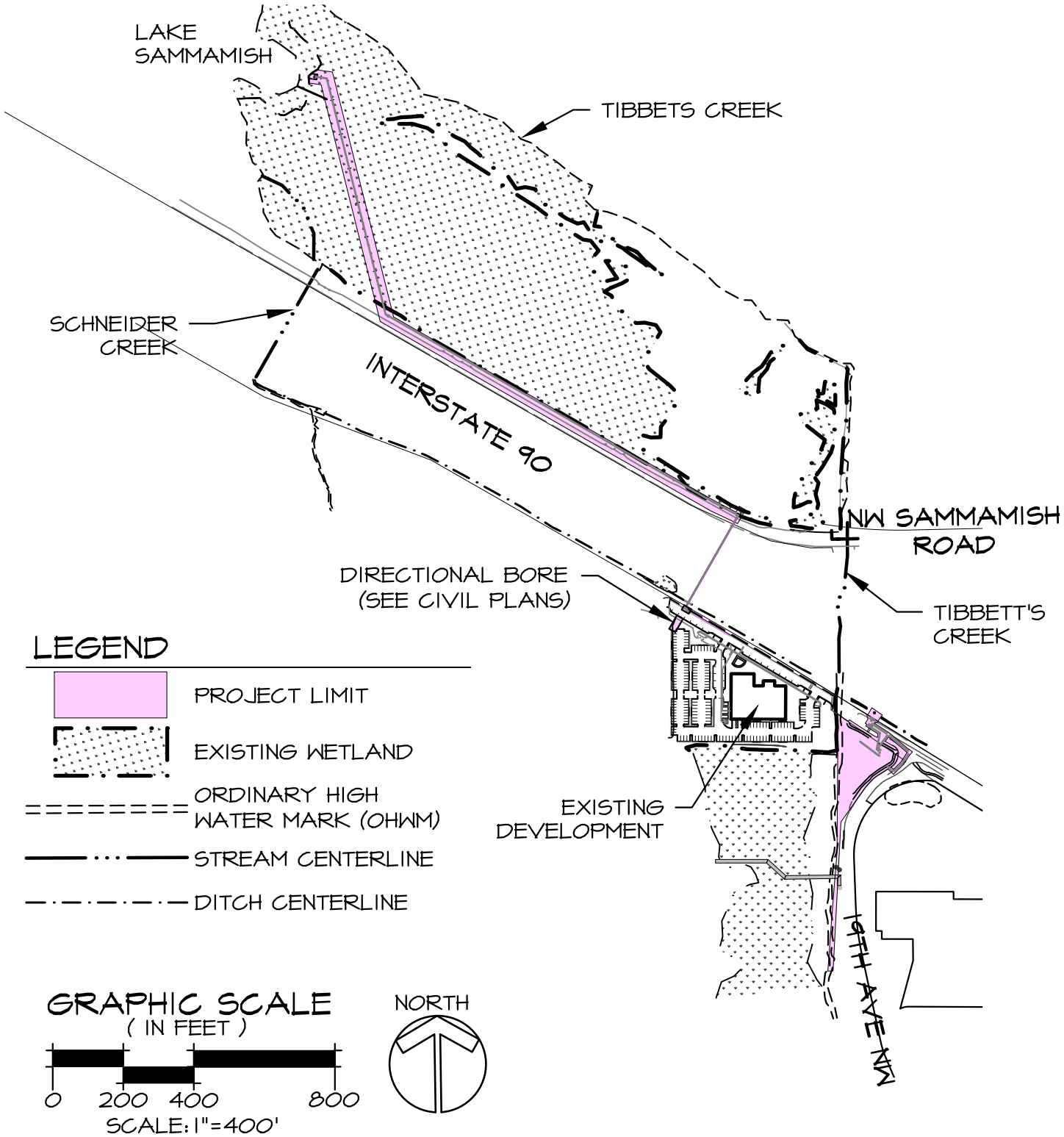

TALASAEA CONSULTANTS, INC.
Resource & Environmental Planning
15020 Bear Creek Road Northeast
Woodinville, Washington 98077
Bus (425)861-7550 - Fax (425)861-7549

FIGURE #3

SITE MAP
HYLA CROSSING STORMWATER
FORCE MAIN OUTFALL
ISSAQUAH, WASHINGTON

DESIGN	DRAWN	PROJECT
	FH	1775
SCALE		
NTS		
DATE		
4-1-2020		
REVISED		

3

Z:\DRAWING\1700-1799\TAL1775\Plans\TAL-1775 FIGURE 2.dwg

© Copyright - Talasaea Consultants, INC.

3/30/2020 12:51 PM

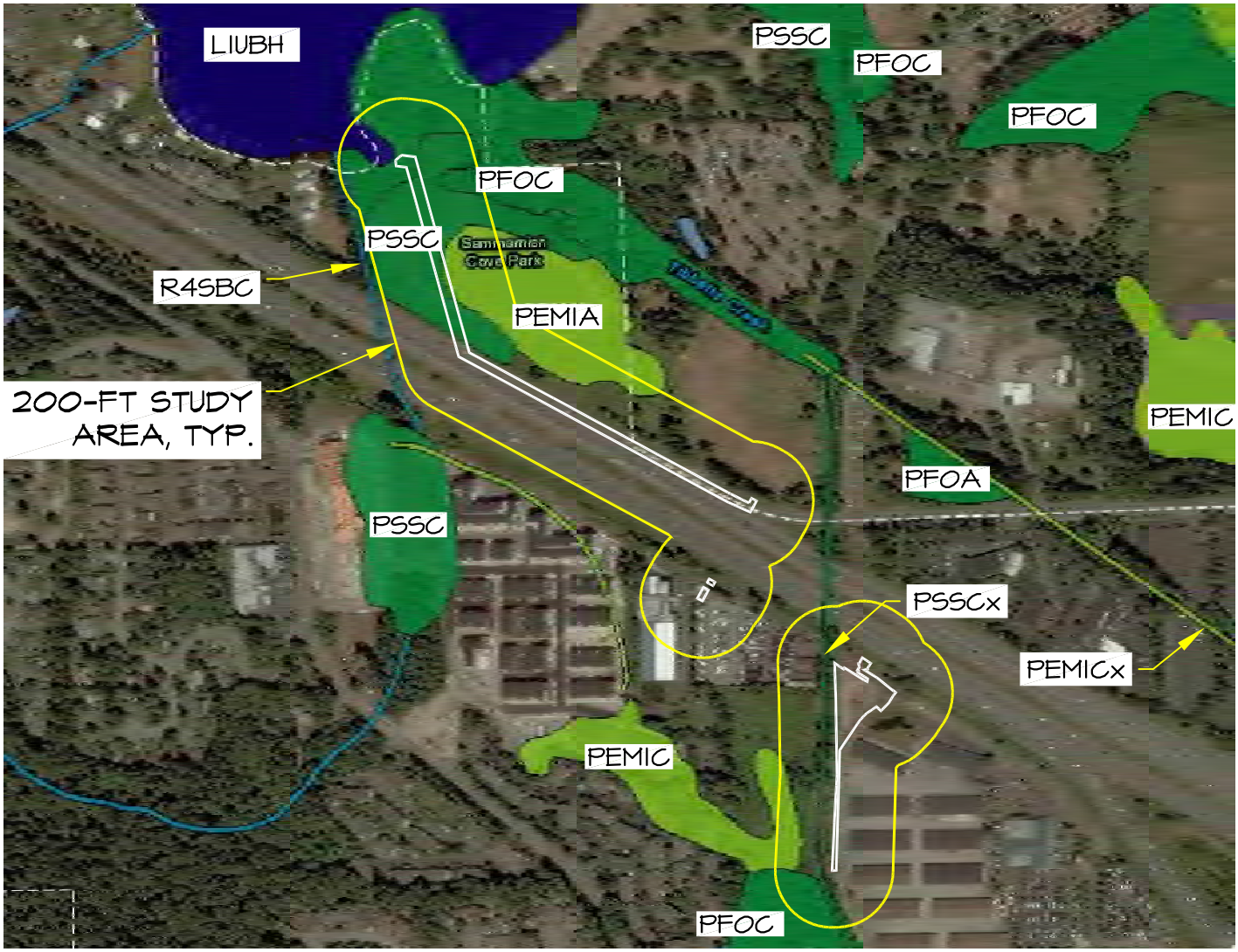

LEGEND

TYPE	DESCRIPTION
LIUBH	LACUSTRINE, LIMNETIC, UNCONSOLIDATED BOTTOM, PERMANENTLY FLOODED
PFOC	PALUSTRINE, FORESTED, SEASONALLY FLOODED
PSSC	PALUSTRINE, SCRUB-SHRUB, SEASONALLY FLOODED.
PSSCx	PLAUSTRINE, SCRUB-SHRUB, SEASONALLY FLOODED, EXCAVATED
PEMIA	PALUSTRINE, EMERGENT, PERSISTENT, TEMPORARY FLOODED.
PEMIC	PALUSTRINE, EMERGENT, PERSISTENT, SEASONALLY FLOODED
R4SBC	RIVERINE, INTERMITTENT, STREAMBED, SEASONALLY FLOODED

SOURCE: U.S. FISH AND WILDLIFE SERVICE, (JAN 2015). NATIONAL WETLANDS INVENTORY WEBSITE, U.S. DEPARTMENT OF THE INTERIOR, FISH AND WILDLIFE SERVICE, WASHINGTON D.C. http://www.fws.gov/wetlands/data/wetland-codes.html

NORTH
N.T.S.

TALASAEA CONSULTANTS, INC.
Resource & Environmental Planning
15020 Bear Creek Road Northeast
Woodinville, Washington 98077
Bus (425)861-7550 - Fax (425)861-7549

FIGURE # 4

NATIONAL WETLANDS INVENTORY MAP

HYLA CROSSING PUMPED STORMWATER DISCHARGE
ISSAQUAH, WA

DESIGN	DRAWN	PROJECT
AO	FH	1775
SCALE N.T.S.		
DATE 4-1-2020		4
REVISED		

Z:\DRAWING\1700-1799\TAL1775\Plans\TAL-1775 Figures 2020-03.dwg

© Copyright - Talasaea Consultants, INC.

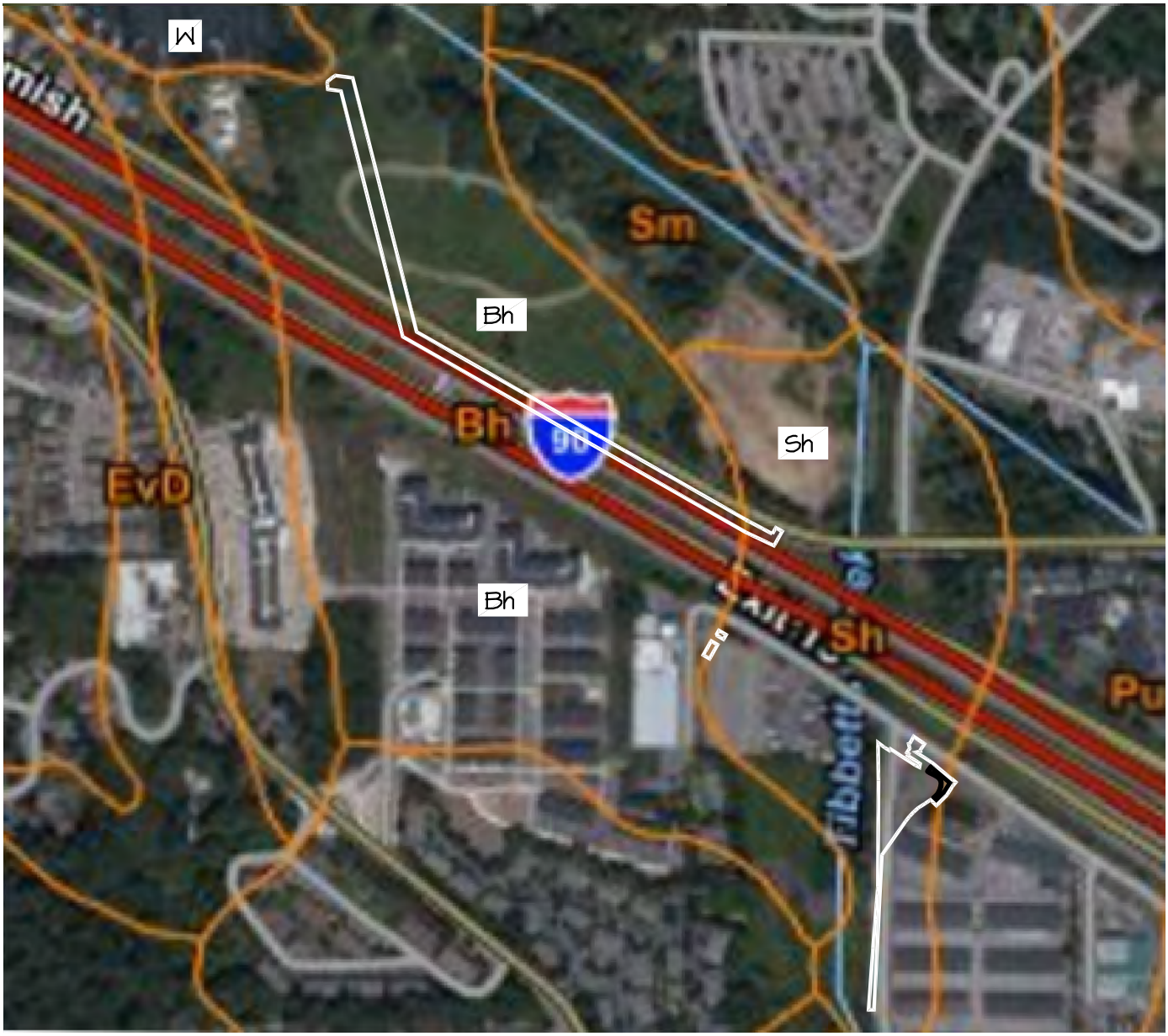

LEGEND

TYPE	DESCRIPTION, SLOPES
Bh	BELLINGHAM SILT LOAM
Sh	SAMMASMISH SILT LOAM
Sm	SHALCAR MUCK
W	WATER

SOURCE: SOIL SURVEY STAFF, NATURAL RESOURCES CONSERVATION SERVICE, UNITED STATES DEPARTMENT OF AGRICULTURE, WEB SOIL SURVEY. AVAILABLE ONLINE AT http://websoilsurvey.nrcs.usda.gov/. ACCESSED (10-07-2019).

NORTH
N.T.S.

TALASAEA CONSULTANTS, INC.
Resource & Environmental Planning
15020 Bear Creek Road Northeast
Woodinville, Washington 98077
Bus (425)861-7550 - Fax (425)861-7549

FIGURE #5

NRCS SOIL MAP

HYLA CROSSING PUMPED STORMWATER DISCHARGE
ISSAQUAH, WA

DESIGN	DRAWN	PROJECT
AO	FH	1775

SCALE: N.T.S.

DATE: 4-1-2020

REVISED

5

Z:\DRAWING\1700-1799\TAL1775\Plans\TAL-1775 Figures 2020-03.dwg

© Copyright - Talasaea Consultants, INC.

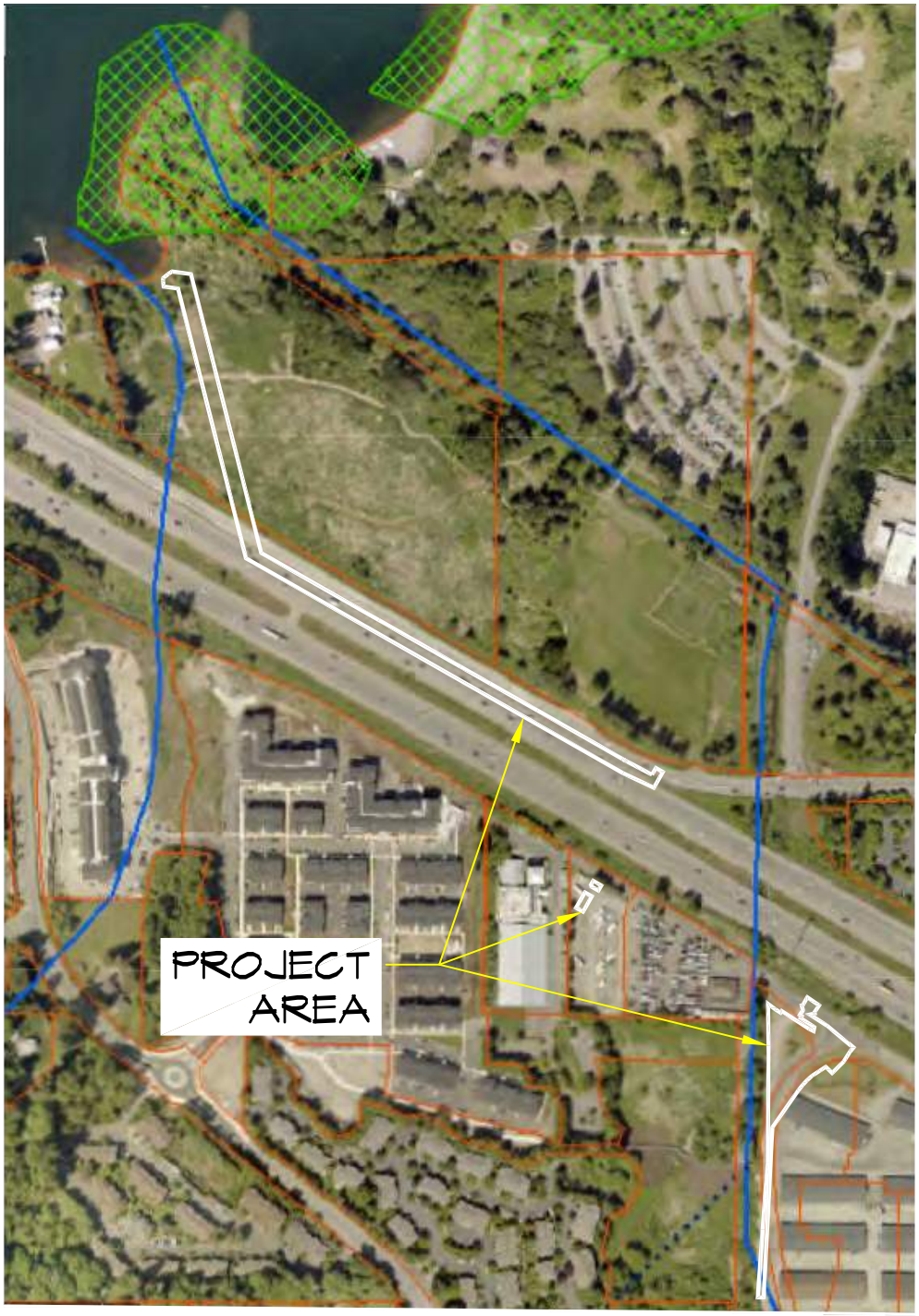

Property Layers

Parcels

Environmentally Sensitive Areas

Stream (1990 SAO)

- class 1
- class 2 perennial
- class 2 salmonid
- class 3
- unclassified

Wetland (1990 SAO)

Sensitive area notice on title

IMAGE SOURCE: KING COUNTY IMAP;
HTTP://WWW.KINGCOUNTY.GOV/IMAP/VIEWER.HTM?MAPSET=KCPROPERTY
(ACCESSED 25 MARCH 2020)

NORTH
N.T.S.

TALASAEA CONSULTANTS, INC.
Resource & Environmental Planning
15020 Bear Creek Road Northeast
Woodinville, Washington 98077
Bus (425)861-7550 - Fax (425)861-7549

FIGURE # 6

KING COUNTY CRITICAL AREAS MAP

HYLA CROSSING PUMPED
STORMWATER DISCHARGE
ISSAQUAH, WA

DESIGN	DRAWN	PROJECT
AO	FH	1775

SCALE: N.T.S.

DATE: 4-1-2020

REVISED

6

Z:\DRAWING\1700-1799\TAL1775\Plans\TAL-1775 Figures 2020-03.dwg

© Copyright - Talasaea Consultants, INC.

NW & SE 1/4 , SECT. 20, T24N, R6E, W.M.

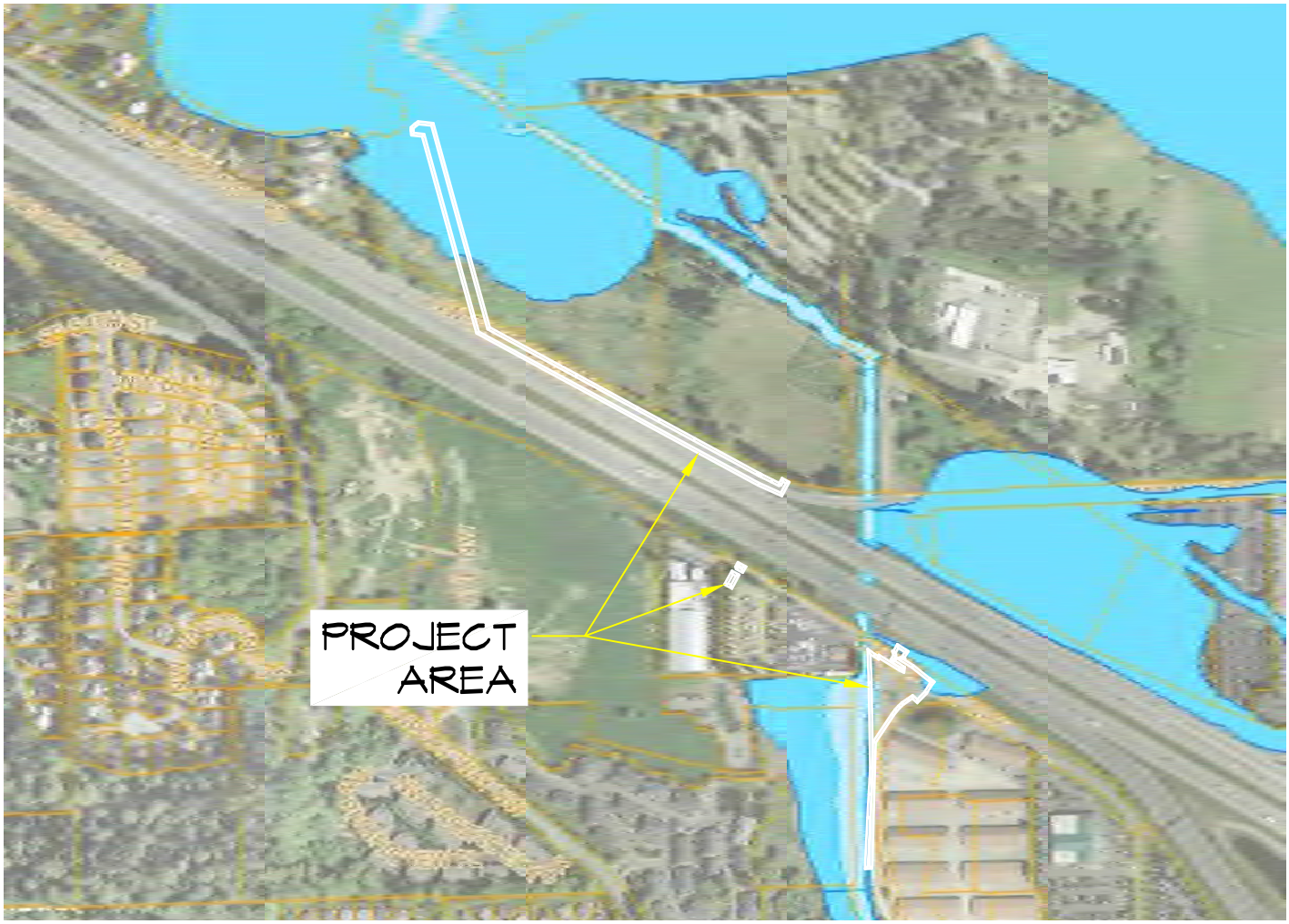

LEGEND

- parcels
  - Parcels
- flood
  - Floodway
  - 100 year Floodplain

IMAGE SOURCE: KING COUNTY IMAP;
HTTPS://PRODUCTS.ISSAQUAHWA.GOV/
HTML5VIEWERPUBLIC/INDEX.HTML?VIEWER=ISSYPUBLIC
(ACCESSED 27 MARCH 2020)

NORTH
N.T.S.

TALASAEA
CONSULTANTS, INC.
Resource & Environmental Planning
15020 Bear Creek Road Northeast
Woodinville, Washington 98077
Bus (425)861-7550 - Fax (425)861-7549

FIGURE #7

CITY OF ISSAQUAH FLOODPLAIN MAP

HYLA CROSSING PUMPED
STORMWATER DISCHARGE
ISSAQUAH, WA

DESIGN	DRAWN	PROJECT
AO	FH	1775
SCALE N.T.S.		
DATE 4-1-2020		7
REVISED		

Z:\DRAWING\1700-1799\TAL1775\Plans\TAL-1775 Figures 2020-03.dwg

© Copyright - Talasaea Consultants, INC.

APPENDIX A

Wetland Delineation Data Sheets, Talasaea Consultants, 2019.

Copyright © 2021 Talasaea Consultants, Inc.

WETLAND DETERMINATION DATA FORM – Western Mountains, Valleys, and Coast Region

Project/Site: TAL 1775 City/County: Issaquah / King County Sampling Date: 03-30-20

Applicant/Owner: _____ State: WA Sampling Point: TP-E1

Investigator(s): A. Ellig Section, Township, Range: NW-20-24-6

Landform (hillslope, terrace, etc.): Floodplain Local relief (concave, convex, none): Concave Slope (%): 0

Subregion (LRR): A Lat: 47.552995 Long: -122.069970 Datum: WGS84

Soil Map Unit Name: Bellingham Silt Loam NWI classification: None

Are climatic / hydrologic conditions on the site typical for this time of year? Yes ☒ No ☐ (If no, explain in Remarks.)

Are Vegetation _____, Soil _____, or Hydrology _____ significantly disturbed? Are "Normal Circumstances" present? Yes ☒ No ☐

Are Vegetation _____, Soil _____, or Hydrology _____ naturally problematic? (If needed, explain any answers in Remarks.)

SUMMARY OF FINDINGS – Attach site map showing sampling point locations, transects, important features, etc.

Hydrophytic Vegetation Present? Yes ☒ No ☐ Hydric Soil Present? Yes ☒ No ☐ Wetland Hydrology Present? Yes ☒ No ☐	**Is the Sampled Area within a Wetland?** Yes ☒ No ☐

Remarks:

VEGETATION – Use scientific names of plants.

Tree Stratum (Plot size: 30')	Absolute % Cover	Dominant Species?	Indicator Status
1. *None*	0		
2.			
3.			
4.			
	0 = Total Cover		
Sapling/Shrub Stratum (Plot size: 15')			
1. *None*	0		
2.			
3.			
4.			
5.			
	0 = Total Cover		
Herb Stratum (Plot size: 5')			
1. *Phalaris arundinacea*	100	Y	FACW
2.			
3.			
4.			
5.			
6.			
7.			
8.			
	100 = Total Cover		
Woody Vine Stratum (Plot size: 15')			
1. *None*			
2.			
	0 = Total Cover		

% Bare Ground in Herb Stratum _____ % Cover of Biotic Crust _____

Dominance Test worksheet:

Number of Dominant Species That Are OBL, FACW, or FAC: 1 (A)

Total Number of Dominant Species Across All Strata: 1 (B)

Percent of Dominant Species That Are OBL, FACW, or FAC: 100 (A/B)

Prevalence Index worksheet:

Total % Cover of:	Multiply by:
OBL species _____	x 1 = _____
FACW species _____	x 2 = _____
FAC species _____	x 3 = _____
FACU species _____	x 4 = _____
UPL species _____	x 5 = _____
Column Totals: _____ (A)	_____ (B)

Prevalence Index = B/A = _____

Hydrophytic Vegetation Indicators:

☒ Dominance Test is >50%

☐ Prevalence Index is ≤3.0[1]

☐ Morphological Adaptations[1] (Provide supporting data in Remarks or on a separate sheet)

☐ Problematic Hydrophytic Vegetation[1] (Explain)

[1]Indicators of hydric soil and wetland hydrology must be present, unless disturbed or problematic.

Hydrophytic Vegetation Present? **Yes** ☒ **No** ☐

Remarks: Hydrophytic vegetation criteria met.

SOIL

Sampling Point: TP-E1

Profile Description: (Describe to the depth needed to document the indicator or confirm the absence of indicators.)

Depth (inches)	Matrix Color (moist)	Matrix %	Redox Features Color (moist)	Redox %	Type[1]	Loc[2]	Texture	Remarks
0-7	10YR 3/3	100					loam	
7-10	10YR 4/2	80	7.5YR 4/4	20	C	M	sandy loam	
10-18	10YR 4/1	70	7.5YR 4/6	30	C	M	sandy loam	

[1]Type: C=Concentration, D=Depletion, RM=Reduced Matrix, CS=Covered or Coated Sand Grains. [2]Location: PL=Pore Lining, M=Matrix.

Hydric Soil Indicators: (Applicable to all LRRs, unless otherwise noted.)

- ☐ Histosol (A1)
- ☐ Histic Epipedon (A2)
- ☐ Black Histic (A3)
- ☐ Hydrogen Sulfide (A4)
- ☐ Depleted Below Dark Surface (A11)
- ☐ Thick Dark Surface (A12)
- ☐ Sandy Mucky Mineral (S1)
- ☐ Sandy Gleyed Matrix (S4)
- ☐ Sandy Redox (S5)
- ☐ Stripped Matrix (S6)
- ☐ Loamy Mucky Mineral (F1 (**except MLRA 1**))
- ☐ Loamy Gleyed Matrix (F2)
- ☒ Depleted Matrix (F3)
- ☐ Redox Dark Surface (F6)
- ☐ Depleted Dark Surface (F7)
- ☐ Redox Depressions (F8)

Indicators for Problematic Hydric Soils[3]:

- ☐ 2 cm Muck (A10)
- ☐ Red Parent Material (TF2)
- ☐ Very Shallow Dark Surface (TF12)
- ☐ Other (Explain in Remarks

[3]Indicators of hydrophytic vegetation and wetland hydrology must be present, unless disturbed or problematic.

Restrictive Layer (if present):

Type: _____

Depth (inches): _____

Hydric Soil Present? **Yes** ☒ **No** ☐

Remarks: Hydric soil criteria met.

HYDROLOGY

Wetland Hydrology Indicators:

Primary Indicators (minimum of one required; check all that apply)

- ☒ Surface Water (A1)
- ☒ High Water Table (A2)
- ☒ Saturation (A3)
- ☐ Water Marks (B1)
- ☐ Sediment Deposits (B2)
- ☐ Drift Deposits (B3)
- ☐ Algal Mat or Crust (B4)
- ☐ Iron Deposits (B5)
- ☐ Surface Soil Cracks (B6)
- ☐ Inundation Visible on Aerial Imagery (B7)
- ☐ Sparsely Vegetated Concave Surface (B8)
- ☐ Water-Stained Leaves (B9) (**except MLRA 1, 2, 4A, and 4B**)
- ☐ Salt Crust (B11)
- ☐ Aquatic Invertebrates (B13)
- ☐ Hydrogen Sulfide Odor (C1)
- ☐ Oxidized Rhizospheres along Living Roots (C3)
- ☐ Presence of Reduced Iron (C4)
- ☐ Recent Iron Reduction in Tilled Soils (C6)
- ☐ Stunted or Stressed Plants (D1)(**LRR A**)
- ☐ Other (Explain in Remarks)

Secondary Indicators (2 or more required)

- ☐ Water Stained Leaves (B9) (**MLRA 1, 2, 4A, and 4B)**)
- ☐ Drainage Patterns (B10)
- ☐ Dry-Season Water Table (C2)
- ☐ Saturation Visible on Aerial Imagery (C9)
- ☒ Geomorphic Position (D2)
- ☐ Shallow Aquitard (D3)
- ☐ FAC-Neutral Test (D5)
- ☐ Raised Ant Mounds (D6(**LRR A**)
- ☐ Frost-Heave Hummocks (D7)

Field Observations:

Surface Water Present? Yes ☒ No ☐ Depth (inches): _____

Water Table Present? Yes ☒ No ☐ Depth (inches): _____

Saturation Present? (includes capillary fringe) Yes ☒ No ☐ Depth (inches): _____

Wetland Hydrology Present? **Yes** ☒ **No** ☐

Describe Recorded Data (stream gauge, monitoring well, aerial photos, previous inspections), if available:

Remarks: Wetland hydrology criteria met.

WETLAND DETERMINATION DATA FORM – Western Mountains, Valleys, and Coast Region

Project/Site: TAL 1775 City/County: Issaquah / King County Sampling Date: 03-30-20

Applicant/Owner: _____ State: WA Sampling Point: TP-E2

Investigator(s): A. Ellig Section, Township, Range: NW-20-24-6

Landform (hillslope, terrace, etc.): Floodplain Local relief (concave, convex, none): None Slope (%): 0

Subregion (LRR): A Lat: 47.553016 Long: -122.069886 Datum: WGS84

Soil Map Unit Name: Bellingham Silt Loam NWI classification: None

Are climatic / hydrologic conditions on the site typical for this time of year? Yes ☒ No ☐ (If no, explain in Remarks.)

Are Vegetation _____, Soil _____, or Hydrology _____ significantly disturbed? Are "Normal Circumstances" present? Yes ☒ No ☐

Are Vegetation _____, Soil _____, or Hydrology _____ naturally problematic? (If needed, explain any answers in Remarks.)

SUMMARY OF FINDINGS – Attach site map showing sampling point locations, transects, important features, etc.

Hydrophytic Vegetation Present?	Yes ☒ No ☐	**Is the Sampled Area within a Wetland?** Yes ☐ No ☒
Hydric Soil Present?	Yes ☐ No ☒	
Wetland Hydrology Present?	Yes ☒ No ☐	

Remarks:

VEGETATION – Use scientific names of plants.

Tree Stratum (Plot size: 30')	Absolute % Cover	Dominant Species?	Indicator Status
1. *None*	0		
2.			
3.			
4.			
	0 = Total Cover		
Sapling/Shrub Stratum (Plot size: 15')			
1. *None*	0		
2.			
3.			
4.			
5.			
	0 = Total Cover		
Herb Stratum (Plot size: 5')			
1. *Taraxacum sp.*	5	N	FAC
2. *Plantago lanceolata*	5	N	FACU
3. *Fescuta rubra*	80	Y	FAC
4. *Trifolium sp.*	10	N	NL
5.			
6.			
7.			
8.			
	100 = Total Cover		
Woody Vine Stratum (Plot size: 15')			
1. *None*			
2.			
	0 = Total Cover		

% Bare Ground in Herb Stratum _____ % Cover of Biotic Crust _____

Dominance Test worksheet:

Number of Dominant Species That Are OBL, FACW, or FAC: 1 (A)

Total Number of Dominant Species Across All Strata: 1 (B)

Percent of Dominant Species That Are OBL, FACW, or FAC: 100 (A/B)

Prevalence Index worksheet:

Total % Cover of:	Multiply by:
OBL species _____	x 1 = _____
FACW species _____	x 2 = _____
FAC species _____	x 3 = _____
FACU species _____	x 4 = _____
UPL species _____	x 5 = _____
Column Totals: _____ (A)	_____ (B)

Prevalence Index = B/A = _____

Hydrophytic Vegetation Indicators:

☒ Dominance Test is >50%

☐ Prevalence Index is ≤3.0[1]

☐ Morphological Adaptations[1] (Provide supporting data in Remarks or on a separate sheet)

☐ Problematic Hydrophytic Vegetation[1] (Explain)

[1]Indicators of hydric soil and wetland hydrology must be present, unless disturbed or problematic.

Hydrophytic Vegetation Present? **Yes** ☒ **No** ☐

Remarks: Hydrophytic vegetation criteria met.

SOIL

Sampling Point: TP-E2

Profile Description: (Describe to the depth needed to document the indicator or confirm the absence of indicators.)

Depth (inches)	Matrix Color (moist)	Matrix %	Redox Features Color (moist)	Redox %	Type[1]	Loc[2]	Texture	Remarks
0-5	10YR 3/3	100					loam	
5-14	10YR 4/4	100					loam	coarse gravel

[1]Type: C=Concentration, D=Depletion, RM=Reduced Matrix, CS=Covered or Coated Sand Grains. [2]Location: PL=Pore Lining, M=Matrix.

Hydric Soil Indicators: (Applicable to all LRRs, unless otherwise noted.)

- ☐ Histosol (A1)
- ☐ Histic Epipedon (A2)
- ☐ Black Histic (A3)
- ☐ Hydrogen Sulfide (A4)
- ☐ Depleted Below Dark Surface (A11)
- ☐ Thick Dark Surface (A12)
- ☐ Sandy Mucky Mineral (S1)
- ☐ Sandy Gleyed Matrix (S4)
- ☐ Sandy Redox (S5)
- ☐ Stripped Matrix (S6)
- ☐ Loamy Mucky Mineral (F1 (**except MLRA 1**))
- ☐ Loamy Gleyed Matrix (F2)
- ☐ Depleted Matrix (F3)
- ☐ Redox Dark Surface (F6)
- ☐ Depleted Dark Surface (F7)
- ☐ Redox Depressions (F8)

Indicators for Problematic Hydric Soils[3]:

- ☐ 2 cm Muck (A10)
- ☐ Red Parent Material (TF2)
- ☐ Very Shallow Dark Surface (TF12)
- ☐ Other (Explain in Remarks

[3]Indicators of hydrophytic vegetation and wetland hydrology must be present, unless disturbed or problematic.

Restrictive Layer (if present):

Type: _____

Depth (inches): _____

Hydric Soil Present? **Yes** ☐ **No** ☒

Remarks: Hydric soil criteria not met.

HYDROLOGY

Wetland Hydrology Indicators:

Primary Indicators (minimum of one required; check all that apply)

- ☐ Surface Water (A1)
- ☒ High Water Table (A2)
- ☒ Saturation (A3)
- ☐ Water Marks (B1)
- ☐ Sediment Deposits (B2)
- ☐ Drift Deposits (B3)
- ☐ Algal Mat or Crust (B4)
- ☐ Iron Deposits (B5)
- ☐ Surface Soil Cracks (B6)
- ☐ Inundation Visible on Aerial Imagery (B7)
- ☐ Sparsely Vegetated Concave Surface (B8)
- ☐ Water-Stained Leaves (B9) (**except MLRA 1, 2, 4A, and 4B**)
- ☐ Salt Crust (B11)
- ☐ Aquatic Invertebrates (B13)
- ☐ Hydrogen Sulfide Odor (C1)
- ☐ Oxidized Rhizospheres along Living Roots (C3)
- ☐ Presence of Reduced Iron (C4)
- ☐ Recent Iron Reduction in Tilled Soils (C6)
- ☐ Stunted or Stressed Plants (D1)(**LRR A**)
- ☐ Other (Explain in Remarks)

Secondary Indicators (2 or more required)

- ☐ Water Stained Leaves (B9) (**MLRA 1, 2, 4A, and 4B)**)
- ☐ Drainage Patterns (B10)
- ☐ Dry-Season Water Table (C2)
- ☐ Saturation Visible on Aerial Imagery (C9)
- ☐ Geomorphic Position (D2)
- ☐ Shallow Aquitard (D3)
- ☐ FAC-Neutral Test (D5)
- ☐ Raised Ant Mounds (D6(**LRR A**)
- ☐ Frost-Heave Hummocks (D7)

Field Observations:

Surface Water Present? Yes ☐ No ☒ Depth (inches): _____

Water Table Present? Yes ☒ No ☐ Depth (inches): 7"

Saturation Present? (includes capillary fringe) Yes ☒ No ☐ Depth (inches): 6"

Wetland Hydrology Present? **Yes** ☒ **No** ☐

Describe Recorded Data (stream gauge, monitoring well, aerial photos, previous inspections), if available:

Remarks: Wetland hydrology criteria met.

WETLAND DETERMINATION DATA FORM – Western Mountains, Valleys, and Coast Region

Project/Site: TAL 1775 City/County: Issaquah / King County Sampling Date: 03-30-20

Applicant/Owner: _____ State: WA Sampling Point: TP-E3

Investigator(s): A. Ellig Section, Township, Range: NW-20-24-6

Landform (hillslope, terrace, etc.): Floodplain Local relief (concave, convex, none): Concave Slope (%): 0

Subregion (LRR): A Lat: 47.553512 Long: -122.070162 Datum: WGS84

Soil Map Unit Name: Bellingham Silt Loam NWI classification: None

Are climatic / hydrologic conditions on the site typical for this time of year? Yes ☒ No ☐ (If no, explain in Remarks.)

Are Vegetation _____, Soil _____, or Hydrology _____ significantly disturbed? Are "Normal Circumstances" present? Yes ☒ No ☐

Are Vegetation _____, Soil _____, or Hydrology _____ naturally problematic? (If needed, explain any answers in Remarks.)

SUMMARY OF FINDINGS – Attach site map showing sampling point locations, transects, important features, etc.

Hydrophytic Vegetation Present? Yes ☒ No ☐ Hydric Soil Present? Yes ☒ No ☐ Wetland Hydrology Present? Yes ☒ No ☐	**Is the Sampled Area within a Wetland?** Yes ☒ No ☐

Remarks:

VEGETATION – Use scientific names of plants.

Tree Stratum (Plot size: 30')	Absolute % Cover	Dominant Species?	Indicator Status
1. *None*	0		
2.			
3.			
4.			
	0 = Total Cover		
Sapling/Shrub Stratum (Plot size: 15')			
1. *None*	0		
2.			
3.			
4.			
5.			
	0 = Total Cover		
Herb Stratum (Plot size: 5')			
1. *Phalaris arundinacea*	100	Y	FACW
2.			
3.			
4.			
5.			
6.			
7.			
8.			
	100 = Total Cover		
Woody Vine Stratum (Plot size: 15')			
1. *None*			
2.			
	0 = Total Cover		

% Bare Ground in Herb Stratum _____ % Cover of Biotic Crust _____

Dominance Test worksheet:

Number of Dominant Species That Are OBL, FACW, or FAC: 1 (A)

Total Number of Dominant Species Across All Strata: 1 (B)

Percent of Dominant Species That Are OBL, FACW, or FAC: 100 (A/B)

Prevalence Index worksheet:

Total % Cover of:	Multiply by:
OBL species _____	x 1 = _____
FACW species _____	x 2 = _____
FAC species _____	x 3 = _____
FACU species _____	x 4 = _____
UPL species _____	x 5 = _____
Column Totals: _____ (A)	_____ (B)

Prevalence Index = B/A = _____

Hydrophytic Vegetation Indicators:

- ☒ Dominance Test is >50%
- ☐ Prevalence Index is ≤3.0[1]
- ☐ Morphological Adaptations[1] (Provide supporting data in Remarks or on a separate sheet)
- ☐ Problematic Hydrophytic Vegetation[1] (Explain)

[1]Indicators of hydric soil and wetland hydrology must be present, unless disturbed or problematic.

Hydrophytic Vegetation Present? **Yes** ☒ **No** ☐

Remarks: Hydrophytic vegetation criteria met.

SOIL

Sampling Point: TP-E3

Profile Description: (Describe to the depth needed to document the indicator or confirm the absence of indicators.)

Depth (inches)	Matrix Color (moist)	Matrix %	Redox Features Color (moist)	Redox %	Type[1]	Loc[2]	Texture	Remarks
0-4	10YR 3/2	90	10YR 4/4	10	C	M	loam	
5-18	10YR 5/1	80	10YR 4/6	20	C	M	loam	

[1]Type: C=Concentration, D=Depletion, RM=Reduced Matrix, CS=Covered or Coated Sand Grains. [2]Location: PL=Pore Lining, M=Matrix.

Hydric Soil Indicators: (Applicable to all LRRs, unless otherwise noted.)

- ☐ Histosol (A1)
- ☐ Histic Epipedon (A2)
- ☐ Black Histic (A3)
- ☐ Hydrogen Sulfide (A4)
- ☐ Depleted Below Dark Surface (A11)
- ☐ Thick Dark Surface (A12)
- ☐ Sandy Mucky Mineral (S1)
- ☐ Sandy Gleyed Matrix (S4)
- ☐ Sandy Redox (S5)
- ☐ Stripped Matrix (S6)
- ☐ Loamy Mucky Mineral (F1 (**except MLRA 1**))
- ☐ Loamy Gleyed Matrix (F2)
- ☒ Depleted Matrix (F3)
- ☐ Redox Dark Surface (F6)
- ☐ Depleted Dark Surface (F7)
- ☐ Redox Depressions (F8)

Indicators for Problematic Hydric Soils[3]:

- ☐ 2 cm Muck (A10)
- ☐ Red Parent Material (TF2)
- ☐ Very Shallow Dark Surface (TF12)
- ☐ Other (Explain in Remarks

[3]Indicators of hydrophytic vegetation and wetland hydrology must be present, unless disturbed or problematic.

Restrictive Layer (if present):

Type: _____

Depth (inches): _____

Hydric Soil Present? **Yes** ☒ **No** ☐

Remarks: Hydric soil criteria met.

HYDROLOGY

Wetland Hydrology Indicators:

Primary Indicators (minimum of one required; check all that apply)

- ☒ Surface Water (A1)
- ☒ High Water Table (A2)
- ☒ Saturation (A3)
- ☐ Water Marks (B1)
- ☐ Sediment Deposits (B2)
- ☐ Drift Deposits (B3)
- ☐ Algal Mat or Crust (B4)
- ☐ Iron Deposits (B5)
- ☐ Surface Soil Cracks (B6)
- ☐ Inundation Visible on Aerial Imagery (B7)
- ☐ Sparsely Vegetated Concave Surface (B8)
- ☐ Water-Stained Leaves (B9) (**except MLRA 1, 2, 4A, and 4B**)
- ☐ Salt Crust (B11)
- ☐ Aquatic Invertebrates (B13)
- ☐ Hydrogen Sulfide Odor (C1)
- ☐ Oxidized Rhizospheres along Living Roots (C3)
- ☐ Presence of Reduced Iron (C4)
- ☐ Recent Iron Reduction in Tilled Soils (C6)
- ☐ Stunted or Stressed Plants (D1)(**LRR A**)
- ☐ Other (Explain in Remarks)

Secondary Indicators (2 or more required)

- ☐ Water Stained Leaves (B9) (**MLRA 1, 2, 4A, and 4B)**)
- ☐ Drainage Patterns (B10)
- ☐ Dry-Season Water Table (C2)
- ☐ Saturation Visible on Aerial Imagery (C9)
- ☒ Geomorphic Position (D2)
- ☐ Shallow Aquitard (D3)
- ☐ FAC-Neutral Test (D5)
- ☐ Raised Ant Mounds (D6(**LRR A**)
- ☐ Frost-Heave Hummocks (D7)

Field Observations:

Surface Water Present? Yes ☒ No ☐ Depth (inches): _____

Water Table Present? Yes ☒ No ☐ Depth (inches): _____

Saturation Present? (includes capillary fringe) Yes ☒ No ☐ Depth (inches): _____

Wetland Hydrology Present? **Yes** ☒ **No** ☐

Describe Recorded Data (stream gauge, monitoring well, aerial photos, previous inspections), if available:

Remarks: Wetland hydrology criteria met.

WETLAND DETERMINATION DATA FORM – Western Mountains, Valleys, and Coast Region

Project/Site: TAL 1775 City/County: Issaquah / King County Sampling Date: 03-30-20

Applicant/Owner: _____ State: WA Sampling Point: TP-E4

Investigator(s): A. Ellig Section, Township, Range: NW-20-24-6

Landform (hillslope, terrace, etc.): Floodplain Local relief (concave, convex, none): None Slope (%): 0

Subregion (LRR): A Lat: 47.553526 Long: -122.070098 Datum: WGS84

Soil Map Unit Name: Bellingham Silt Loam NWI classification: None

Are climatic / hydrologic conditions on the site typical for this time of year? Yes ☒ No ☐ (If no, explain in Remarks.)

Are Vegetation _____, Soil _____, or Hydrology _____ significantly disturbed? Are "Normal Circumstances" present? Yes ☒ No ☐

Are Vegetation _____, Soil _____, or Hydrology _____ naturally problematic? (If needed, explain any answers in Remarks.)

SUMMARY OF FINDINGS – Attach site map showing sampling point locations, transects, important features, etc.

Hydrophytic Vegetation Present?	Yes ☒ No ☐	**Is the Sampled Area within a Wetland?** Yes ☐ No ☒
Hydric Soil Present?	Yes ☐ No ☒	
Wetland Hydrology Present?	Yes ☒ No ☐	

Remarks:

VEGETATION – Use scientific names of plants.

Tree Stratum (Plot size: 30')	Absolute % Cover	Dominant Species?	Indicator Status
1. *None*	0		
2.			
3.			
4.			
	0 = Total Cover		
Sapling/Shrub Stratum (Plot size: 15')			
1. *None*	0		
2.			
3.			
4.			
5.			
	0 = Total Cover		
Herb Stratum (Plot size: 5')			
1. *Hypochaeris radicata*	10	N	FACU
2. *Phalaris arundinacea*	5	N	FACW
3. *Fescuta rubra*	85	Y	FAC
4.			
5.			
6.			
7.			
8.			
	100 = Total Cover		
Woody Vine Stratum (Plot size: 15')			
1. *None*			
2.			
	0 = Total Cover		

% Bare Ground in Herb Stratum _____ % Cover of Biotic Crust _____

Dominance Test worksheet:

Number of Dominant Species That Are OBL, FACW, or FAC: 1 (A)

Total Number of Dominant Species Across All Strata: 1 (B)

Percent of Dominant Species That Are OBL, FACW, or FAC: 100 (A/B)

Prevalence Index worksheet:

Total % Cover of:	Multiply by:
OBL species _____	x 1 = _____
FACW species _____	x 2 = _____
FAC species _____	x 3 = _____
FACU species _____	x 4 = _____
UPL species _____	x 5 = _____
Column Totals: _____ (A)	_____ (B)

Prevalence Index = B/A = _____

Hydrophytic Vegetation Indicators:

☒ Dominance Test is >50%

☐ Prevalence Index is ≤3.0[1]

☐ Morphological Adaptations[1] (Provide supporting data in Remarks or on a separate sheet)

☐ Problematic Hydrophytic Vegetation[1] (Explain)

[1]Indicators of hydric soil and wetland hydrology must be present, unless disturbed or problematic.

Hydrophytic Vegetation Present? **Yes** ☒ **No** ☐

Remarks: Hydrophytic vegetation criteria met.

SOIL

Sampling Point: TP-E4

Profile Description: (Describe to the depth needed to document the indicator or confirm the absence of indicators.)

Depth (inches)	Matrix Color (moist)	Matrix %	Redox Features Color (moist)	Redox %	Type[1]	Loc[2]	Texture	Remarks
0-10	10YR 3/3	100					loam	
10-16	10YR 3/3	90	10YR 4/4				loam	coarse gravel

[1]Type: C=Concentration, D=Depletion, RM=Reduced Matrix, CS=Covered or Coated Sand Grains. [2]Location: PL=Pore Lining, M=Matrix.

Hydric Soil Indicators: (Applicable to all LRRs, unless otherwise noted.)

- ☐ Histosol (A1)
- ☐ Histic Epipedon (A2)
- ☐ Black Histic (A3)
- ☐ Hydrogen Sulfide (A4)
- ☐ Depleted Below Dark Surface (A11)
- ☐ Thick Dark Surface (A12)
- ☐ Sandy Mucky Mineral (S1)
- ☐ Sandy Gleyed Matrix (S4)
- ☐ Sandy Redox (S5)
- ☐ Stripped Matrix (S6)
- ☐ Loamy Mucky Mineral (F1 (**except MLRA 1**))
- ☐ Loamy Gleyed Matrix (F2)
- ☐ Depleted Matrix (F3)
- ☐ Redox Dark Surface (F6)
- ☐ Depleted Dark Surface (F7)
- ☐ Redox Depressions (F8)

Indicators for Problematic Hydric Soils[3]:

- ☐ 2 cm Muck (A10)
- ☐ Red Parent Material (TF2)
- ☐ Very Shallow Dark Surface (TF12)
- ☐ Other (Explain in Remarks

[3]Indicators of hydrophytic vegetation and wetland hydrology must be present, unless disturbed or problematic.

Restrictive Layer (if present):

Type: _____

Depth (inches): _____

Hydric Soil Present? **Yes** ☐ **No** ☒

Remarks: Hydric soil criteria not met.

HYDROLOGY

Wetland Hydrology Indicators:

Primary Indicators (minimum of one required; check all that apply)

- ☐ Surface Water (A1)
- ☒ High Water Table (A2)
- ☒ Saturation (A3)
- ☐ Water Marks (B1)
- ☐ Sediment Deposits (B2)
- ☐ Drift Deposits (B3)
- ☐ Algal Mat or Crust (B4)
- ☐ Iron Deposits (B5)
- ☐ Surface Soil Cracks (B6)
- ☐ Inundation Visible on Aerial Imagery (B7)
- ☐ Sparsely Vegetated Concave Surface (B8)
- ☐ Water-Stained Leaves (B9) (**except MLRA 1, 2, 4A, and 4B**)
- ☐ Salt Crust (B11)
- ☐ Aquatic Invertebrates (B13)
- ☐ Hydrogen Sulfide Odor (C1)
- ☐ Oxidized Rhizospheres along Living Roots (C3)
- ☐ Presence of Reduced Iron (C4)
- ☐ Recent Iron Reduction in Tilled Soils (C6)
- ☐ Stunted or Stressed Plants (D1)(**LRR A**)
- ☐ Other (Explain in Remarks)

Secondary Indicators (2 or more required)

- ☐ Water Stained Leaves (B9) (**MLRA 1, 2, 4A, and 4B)**)
- ☐ Drainage Patterns (B10)
- ☐ Dry-Season Water Table (C2)
- ☐ Saturation Visible on Aerial Imagery (C9)
- ☐ Geomorphic Position (D2)
- ☐ Shallow Aquitard (D3)
- ☐ FAC-Neutral Test (D5)
- ☐ Raised Ant Mounds (D6(**LRR A**)
- ☐ Frost-Heave Hummocks (D7)

Field Observations:

Surface Water Present? Yes ☐ No ☒ Depth (inches): _____

Water Table Present? Yes ☒ No ☐ Depth (inches): 8"

Saturation Present? (includes capillary fringe) Yes ☒ No ☐ Depth (inches): 5"

Wetland Hydrology Present? **Yes** ☒ **No** ☐

Describe Recorded Data (stream gauge, monitoring well, aerial photos, previous inspections), if available:

Remarks: Wetland hydrology criteria met.

APPENDIX B

Wetland Rating Forms, *Washington State Department of Ecology Wetland Rating System for Western Washington* (2014), Talasaea Consultants, 2019.

Copyright © 2021 Talasaea Consultants, Inc.

A, B, C, D

TAL-1775

Wetland name or number _____

RATING SUMMARY – Western Washington

Name of wetland (or ID #): Wetlands A, B, C, D Date of site visit: 10/8/18

Rated by J. Marriott Trained by Ecology? ✓ Yes ___ No Date of training 4/2015

HGM Class used for rating Depressional Wetland has multiple HGM classes? ___ Y ✓ N

NOTE: Form is not complete without the figures requested *(figures can be combined).*
Source of base aerial photo/map _____

OVERALL WETLAND CATEGORY _____ (based on functions___ or special characteristics___)

1. Category of wetland based on FUNCTIONS

_____**Category I** – Total score = 23 - 27

_____**Category II** – Total score = 20 - 22

✓ **Category III** – Total score = 16 - 19

_____**Category IV** – Total score = 9 - 15

75'

FUNCTION	Improving Water Quality	Hydrologic	Habitat	
		Circle the appropriate ratings		
Site Potential	H (M) L	H (M) (L)	H M (L)	
Landscape Potential	H (M) L	H (M) L	H M (L)	
Value	(H) M L	(H) M L	(H) M L	**TOTAL**
Score Based on Ratings	7	6	5	18

Score for each function based on three ratings *(order of ratings is not important)*

9 = H,H,H
8 = H,H,M
7 = H,H,L
7 = H,M,M
6 = H,M,L
6 = M,M,M
5 = H,L,L
5 = M,M,L
4 = M,L,L
3 = L,L,L

2. Category based on SPECIAL CHARACTERISTICS of wetland

CHARACTERISTIC	CATEGORY
Estuarine	I II
Wetland of High Conservation Value	I
Bog	I
Mature Forest	I
Old Growth Forest	I
Coastal Lagoon	I II
Interdunal	I II III IV
None of the above	

Wetland name or number

Maps and figures required to answer questions correctly for Western Washington

Depressional Wetlands

Map of:	To answer questions:	Figure #
Cowardin plant classes	D 1.3, H 1.1, H 1.4	
Hydroperiods	D 1.4, H 1.2	
Location of outlet (*can be added to map of hydroperiods)*	D 1.1, D 4.1	
Boundary of area within 150 ft of the wetland *(can be added to another figure)*	D 2.2, D 5.2	
Map of the contributing basin	D 4.3, D 5.3	
1 km Polygon: Area that extends 1 km from entire wetland edge - including polygons for accessible habitat and undisturbed habitat	H 2.1, H 2.2, H 2.3	
Screen capture of map of 303(d) listed waters in basin (from Ecology website)	D 3.1, D 3.2	
Screen capture of list of TMDLs for WRIA in which unit is found (from web)	D 3.3	

Riverine Wetlands

Map of:	To answer questions:	Figure #
Cowardin plant classes	H 1.1, H 1.4	
Hydroperiods	H 1.2	
Ponded depressions	R 1.1	
Boundary of area within 150 ft of the wetland *(can be added to another figure)*	R 2.4	
Plant cover of trees, shrubs, and herbaceous plants	R 1.2, R 4.2	
Width of unit vs. width of stream *(can be added to another figure)*	R 4.1	
Map of the contributing basin	R 2.2, R 2.3, R 5.2	
1 km Polygon: Area that extends 1 km from entire wetland edge - including polygons for accessible habitat and undisturbed habitat	H 2.1, H 2.2, H 2.3	
Screen capture of map of 303(d) listed waters in basin (from Ecology website)	R 3.1	
Screen capture of list of TMDLs for WRIA in which unit is found (from web)	R 3.2, R 3.3	

Lake Fringe Wetlands

Map of:	To answer questions:	Figure #
Cowardin plant classes	L 1.1, L 4.1, H 1.1, H 1.4	
Plant cover of trees, shrubs, and herbaceous plants	L 1.2	
Boundary of area within 150 ft of the wetland *(can be added to another figure)*	L 2.2	
1 km Polygon: Area that extends 1 km from entire wetland edge - including polygons for accessible habitat and undisturbed habitat	H 2.1, H 2.2, H 2.3	
Screen capture of map of 303(d) listed waters in basin (from Ecology website)	L 3.1, L 3.2	
Screen capture of list of TMDLs for WRIA in which unit is found (from web)	L 3.3	

Slope Wetlands

Map of:	To answer questions:	Figure #
Cowardin plant classes	H 1.1, H 1.4	
Hydroperiods	H 1.2	
Plant cover of **dense** trees, shrubs, and herbaceous plants	S 1.3	
Plant cover of **dense, rigid** trees, shrubs, and herbaceous plants *(can be added to figure above)*	S 4.1	
Boundary of 150 ft buffer (can be added to another figure)	S 2.1, S 5.1	
1 km Polygon: Area that extends 1 km from entire wetland edge - including polygons for accessible habitat and undisturbed habitat	H 2.1, H 2.2, H 2.3	
Screen capture of map of 303(d) listed waters in basin (from Ecology website)	S 3.1, S 3.2	
Screen capture of list of TMDLs for WRIA in which unit is found (from web)	S 3.3	

Wetland name or number A, B, C, D

HGM Classification of Wetlands in Western Washington

For questions 1-7, the criteria described must apply to the entire unit being rated.

If the hydrologic criteria listed in each question do not apply to the entire unit being rated, you probably have a unit with multiple HGM classes. In this case, identify which hydrologic criteria in questions 1-7 apply, and go to Question 8.

1. Are the water levels in the entire unit usually controlled by tides except during floods?

   NO – go to 2 **YES** – the wetland class is **Tidal Fringe** – go to 1.1

   1.1 Is the salinity of the water during periods of annual low flow below 0.5 ppt (parts per thousand)?

   NO – Saltwater Tidal Fringe (Estuarine) **YES – Freshwater Tidal Fringe**
   *If your wetland can be classified as a Freshwater Tidal Fringe use the forms for **Riverine** wetlands. If it is Saltwater Tidal Fringe it is an **Estuarine** wetland and is not scored. This method **cannot** be used to score functions for estuarine wetlands.*

2. The entire wetland unit is flat and precipitation is the only source (>90%) of water to it. Groundwater and surface water runoff are NOT sources of water to the unit.

   NO – go to 3 **YES** – The wetland class is **Flats**
   *If your wetland can be classified as a Flats wetland, use the form for **Depressional** wetlands.*

3. Does the entire wetland unit **meet all** of the following criteria?
   ___The vegetated part of the wetland is on the shores of a body of permanent open water (without any plants on the surface at any time of the year) at least 20 ac (8 ha) in size;
   ___At least 30% of the open water area is deeper than 6.6 ft (2 m).

   NO – go to 4 **YES** – The wetland class is **Lake Fringe** (Lacustrine Fringe)

4. Does the entire wetland unit **meet all** of the following criteria?
   ___The wetland is on a slope (*slope can be very gradual*),
   ___The water flows through the wetland in one direction (unidirectional) and usually comes from seeps. It may flow subsurface, as sheetflow, or in a swale without distinct banks,
   ___The water leaves the wetland **without being impounded**.

   NO – go to 5 **YES** – The wetland class is **Slope**

   NOTE: Surface water does not pond in these type of wetlands except occasionally in very small and shallow depressions or behind hummocks (depressions are usually <3 ft diameter and less than 1 ft deep).

5. Does the entire wetland unit **meet all** of the following criteria?
   ___The unit is in a valley, or stream channel, where it gets inundated by overbank flooding from that stream or river,
   ___The overbank flooding occurs at least once every 2 years.

Wetland name or number _____

NO – go to 6 **YES** – The wetland class is **Riverine**

NOTE: The Riverine unit can contain depressions that are filled with water when the river is not flooding

6. Is the entire wetland unit in a topographic depression in which water ponds, or is saturated to the surface, at some time during the year? *This means that any outlet, if present, is higher than the interior of the wetland.*

NO – go to 7 **YES** – The wetland class is **Depressional**

7. Is the entire wetland unit located in a very flat area with no obvious depression and no overbank flooding? The unit does not pond surface water more than a few inches. The unit seems to be maintained by high groundwater in the area. The wetland may be ditched, but has no obvious natural outlet.

NO – go to 8 **YES** – The wetland class is **Depressional**

8. Your wetland unit seems to be difficult to classify and probably contains several different HGM classes. For example, seeps at the base of a slope may grade into a riverine floodplain, or a small stream within a Depressional wetland has a zone of flooding along its sides. GO BACK AND IDENTIFY WHICH OF THE HYDROLOGIC REGIMES DESCRIBED IN QUESTIONS 1-7 APPLY TO DIFFERENT AREAS IN THE UNIT (make a rough sketch to help you decide). Use the following table to identify the appropriate class to use for the rating system if you have several HGM classes present within the wetland unit being scored.

NOTE: Use this table only if the class that is recommended in the second column represents 10% or more of the total area of the wetland unit being rated. If the area of the HGM class listed in column 2 is less than 10% of the unit; classify the wetland using the class that represents more than 90% of the total area.

HGM classes within the wetland unit being rated	HGM class to use in rating
Slope + Riverine	Riverine
Slope + Depressional	Depressional
Slope + Lake Fringe	Lake Fringe
Depressional + Riverine along stream within boundary of depression	Depressional
Depressional + Lake Fringe	Depressional
Riverine + Lake Fringe	Riverine
Salt Water Tidal Fringe and any other class of freshwater wetland	Treat as ESTUARINE

If you are still unable to determine which of the above criteria apply to your wetland, or if you have ***more than 2 HGM classes*** *within a wetland boundary, classify the wetland as Depressional for the rating.*

1775

Wetland name or number A,B,C,D

DEPRESSIONAL AND FLATS WETLANDS

Water Quality Functions - Indicators that the site functions to improve water quality

D 1.0. Does the site have the potential to improve water quality?	
D 1.1. Characteristics of surface water outflows from the wetland: Wetland is a depression or flat depression (QUESTION 7 on key) with no surface water leaving it (no outlet). points = 3 Wetland has an intermittently flowing stream or ditch, OR highly constricted permanently flowing outlet. points = 2 Wetland has an unconstricted, or slightly constricted, surface outlet that is permanently flowing points = 1 Wetland is a flat depression (QUESTION 7 on key), whose outlet is a permanently flowing ditch. points = 1	2
D 1.2. The soil 2 in below the surface (or duff layer) is true clay or true organic *(use NRCS definitions)*. Yes = 4 No = 0	Ø
D 1.3. Characteristics and distribution of persistent plants (Emergent, Scrub-shrub, and/or Forested Cowardin classes): Wetland has persistent, ungrazed, plants > 95% of area points = 5 Wetland has persistent, ungrazed, plants > ½ of area points = 3 Wetland has persistent, ungrazed plants > $^{1}/_{10}$ of area points = 1 Wetland has persistent, ungrazed plants < $^{1}/_{10}$ of area points = 0	5
D 1.4. Characteristics of seasonal ponding or inundation: *This is the area that is ponded for at least 2 months. See description in manual.* Area seasonally ponded is > ½ total area of wetland points = 4 Area seasonally ponded is > ¼ total area of wetland points = 2 Area seasonally ponded is < ¼ total area of wetland points = 0	2
Total for D 1 Add the points in the boxes above	9

Rating of Site Potential If score is: ___ **12-16 = H** X **6-11 = M** ___ **0-5 = L** *Record the rating on the first page*

D 2.0. Does the landscape have the potential to support the water quality function of the site?	
D 2.1. Does the wetland unit receive stormwater discharges? Yes = 1 No = 0	Ø
D 2.2. Is > 10% of the area within 150 ft of the wetland in land uses that generate pollutants? park Yes = 1 No = 0	1
D 2.3. Are there septic systems within 250 ft of the wetland? Yes = 1 No = 0	Ø
D 2.4. Are there other sources of pollutants coming into the wetland that are not listed in questions D 2.1-D 2.3? Source_____ Yes = 1 No = 0	Ø
Total for D 2 Add the points in the boxes above	1

Rating of Landscape Potential If score is: ___ **3 or 4 = H** ✓ **1 or 2 = M** ___ **0 = L** *Record the rating on the first page*

D 3.0. Is the water quality improvement provided by the site valuable to society?	
D 3.1. Does the wetland discharge directly (i.e., within 1 mi) to a stream, river, lake, or marine water that is on the 303(d) list? Yes = 1 No = 0	1
D 3.2. Is the wetland in a basin or sub-basin where an aquatic resource is on the 303(d) list? Yes = 1 No = 0	1
D 3.3. Has the site been identified in a watershed or local plan as important for maintaining water quality (*answer YES if there is a TMDL for the basin in which the unit is found*)? Yes = 2 No = 0	2
Total for D 3 Add the points in the boxes above	4

Rating of Value If score is: ✓ **2-4 = H** ___ **1 = M** ___ **0 = L** *Record the rating on the first page*

Wetland name or number

DEPRESSIONAL AND FLATS WETLANDS

Hydrologic Functions - Indicators that the site functions to reduce flooding and stream degradation

D 4.0. Does the site have the potential to reduce flooding and erosion?	
D 4.1. Characteristics of surface water outflows from the wetland: Wetland is a depression or flat depression with no surface water leaving it (no outlet) points = 4 Wetland has an intermittently flowing stream or ditch, OR highly constricted permanently flowing outlet points = 2 Wetland is a flat depression (QUESTION 7 on key), whose outlet is a permanently flowing ditch points = 1 Wetland has an unconstricted, or slightly constricted, surface outlet that is permanently flowing points = 0	2
D 4.2. Depth of storage during wet periods: *Estimate the height af panding abave the bottom of the outlet. For wetlands with na outlet, measure from the surface of permanent water or if dry, the deepest part.* Marks of ponding are 3 ft or more above the surface or bottom of outlet points = 7 Marks of ponding between 2 ft to < 3 ft from surface or bottom of outlet points = 5 Marks are at least 0.5 ft to < 2 ft from surface or bottom of outlet points = 3 The wetland is a "headwater" wetland points = 3 Wetland is flat but has small depressions on the surface that trap water points = 1 Marks of ponding less than 0.5 ft (6 in) points = 0	Ø
D 4.3. Contribution of the wetland to storage in the watershed: *Estimate the ratio of the area of upstream basin contributing surface water to the wetland to the area of the wetland unit itself.* The area of the basin is less than 10 times the area of the unit points = 5 The area of the basin is 10 to 100 times the area of the unit points = 3 The area of the basin is more than 100 times the area of the unit points = 0 Entire wetland is in the Flats class points = 5	3
Total for D 4 Add the points in the boxes above	5

Rating of Site Potential If score is:___**12-16 = H** ___**6-11 = M** ✓ **0-5 = L** *Record the rating on the first page*

D 5.0. Does the landscape have the potential to support hydrologic functions of the site?	
D 5.1. Does the wetland receive stormwater discharges? Yes = 1 No = 0	Ø
D 5.2. Is >10% of the area within 150 ft of the wetland in land uses that generate excess runoff? Yes = 1 No = 0	1
D 5.3. Is more than 25% of the contributing basin of the wetland covered with intensive human land uses (residential at >1 residence/ac, urban, commercial, agriculture, etc.)? Yes = 1 No = 0	Ø
Total for D 5 Add the points in the boxes above	1

Rating of Landscape Potential If score is:___**3 = H** ✓ **1 or 2 = M** ___**0 = L** *Record the rating on the first page*

D 6.0. Are the hydrologic functions provided by the site valuable to society?	
D 6.1. The unit is in a landscape that has flooding problems. *Choose the description that best matches conditions around the wetland unit being rated. Do not add points. Choose the highest score if more than one condition is met.* The wetland captures surface water that would otherwise flow down-gradient into areas where flooding has damaged human or natural resources (e.g., houses or salmon redds): • Flooding occurs in a sub-basin that is immediately down-gradient of unit. points = 2 • Surface flooding problems are in a sub-basin farther down-gradient. points = 1 Flooding from groundwater is an issue in the sub-basin. points = 1 The existing or potential outflow from the wetland is so constrained by human or natural conditions that the water stored by the wetland cannot reach areas that flood. *Explain why* _____ points = 0 There are no problems with flooding downstream of the wetland. points = 0	2
D 6.2. Has the site been identified as important for flood storage or flood conveyance in a regional flood control plan? Yes = 2 No = 0	Ø
Total for D 6 Add the points in the boxes above	2

Rating of Value If score is: ✓ **2-4 = H** ___**1 = M** ___**0 = L** *Record the rating on the first page*

Wetland name or number A, B, C, D

RIVERINE AND FRESHWATER TIDAL FRINGE WETLANDS

Water Quality Functions - Indicators that the site functions to improve water quality

R 1.0. Does the site have the potential to improve water quality?		
R 1.1. Area of surface depressions within the Riverine wetland that can trap sediments during a flooding event:		
Depressions cover > $^3/_4$ area of wetland	points = 8	
Depressions cover > ½ area of wetland	points = 4	
Depressions present but cover < ½ area of wetland	points = 2	
No depressions present	points = 0	
R 1.2. Structure of plants in the wetland (areas with >90% cover at person height, **not** Cowardin classes)		
Trees or shrubs > $^2/_3$ area of the wetland	points = 8	
Trees or shrubs > $^1/_3$ area of the wetland	points = 6	
Herbaceous plants (> 6 in high) > $^2/_3$ area of the wetland	points = 6	
Herbaceous plants (> 6 in high) > $^1/_3$ area of the wetland	points = 3	
Trees, shrubs, and ungrazed herbaceous < $^1/_3$ area of the wetland	points = 0	
Total for R 1	Add the points in the boxes above	

Rating of Site Potential If score is:___**12-16 = H** ___**6-11 = M** ___**0-5 = L** *Record the rating on the first page*

R 2.0. Does the landscape have the potential to support the water quality function of the site?		
R 2.1. Is the wetland within an incorporated city or within its UGA?	Yes = 2 No = 0	
R 2.2. Does the contributing basin to the wetland include a UGA or incorporated area?	Yes = 1 No = 0	
R 2.3. Does at least 10% of the contributing basin contain tilled fields, pastures, or forests that have been clearcut within the last 5 years?	Yes = 1 No = 0	
R 2.4. Is > 10% of the area within 150 ft of the wetland in land uses that generate pollutants?	Yes = 1 No = 0	
R 2.5. Are there other sources of pollutants coming into the wetland that are not listed in questions R 2.1-R 2.4 Other sources _____	Yes = 1 No = 0	
Total for R 2	Add the points in the boxes above	

Rating of Landscape Potential If score is:___**3-6 = H** ___**1 or 2 = M** ___**0 = L** *Record the rating on the first page*

R 3.0. Is the water quality improvement provided by the site valuable to society?		
R 3.1. Is the wetland along a stream or river that is on the 303(d) list or on a tributary that drains to one within 1 mi?	Yes = 1 No = 0	
R 3.2. Is the wetland along a stream or river that has TMDL limits for nutrients, toxics, or pathogens?	Yes = 1 No = 0	
R 3.3. Has the site been identified in a watershed or local plan as important for maintaining water quality? (*answer YES if there is a TMDL for the drainage in which the unit is found*)	Yes = 2 No = 0	
Total for R 3	Add the points in the boxes above	

Rating of Value If score is:___**2-4 = H** ___**1 = M** ___**0 = L** *Record the rating on the first page*

Wetland name or number _____

RIVERINE AND FRESHWATER TIDAL FRINGE WETLANDS

Hydrologic Functions - Indicators that site functions to reduce flooding and stream erosion

R 4.0. Does the site have the potential to reduce flooding and erosion?		
R 4.1. Characteristics of the overbank storage the wetland provides: *Estimate the average width of the wetland perpendicular to the direction of the flow and the width of the stream or river channel (distance between banks). Calculate the ratio: (average width of wetland)/(average width of stream between banks).*		
If the ratio is more than 20	points = 9	
If the ratio is 10-20	points = 6	
If the ratio is 5-<10	points = 4	
If the ratio is 1-<5	points = 2	
If the ratio is < 1	points = 1	
R 4.2. Characteristics of plants that slow down water velocities during floods: *Treat large woody debris as forest or shrub. Choose the points appropriate for the best description (polygons need to have >90% cover at person height. These are NOT Cowardin classes).*		
Forest or shrub for > $^{1}/_{3}$ area OR emergent plants > $^{2}/_{3}$ area	points = 7	
Forest or shrub for > $^{1}/_{10}$ area OR emergent plants > $^{1}/_{3}$ area	points = 4	
Plants do not meet above criteria	points = 0	
Total for R 4	Add the points in the boxes above	

Rating of Site Potential If score is:___**12-16 = H** ___**6-11 = M** ___**0-5 = L** *Record the rating on the first page*

R 5.0. Does the landscape have the potential to support the hydrologic functions of the site?		
R 5.1. Is the stream or river adjacent to the wetland downcut?	Yes = 0 No = 1	
R 5.2. Does the up-gradient watershed include a UGA or incorporated area?	Yes = 1 No = 0	
R 5.3. Is the up-gradient stream or river controlled by dams?	Yes = 0 No = 1	
Total for R 5	Add the points in the boxes above	

Rating of Landscape Potential If score is:___**3 = H** ___**1 or 2 = M** ___**0 = L** *Record the rating on the first page*

R 6.0. Are the hydrologic functions provided by the site valuable to society?		
R 6.1. Distance to the nearest areas downstream that have flooding problems? *Choose the description that best fits the site.*		
The sub-basin immediately down-gradient of the wetland has flooding problems that result in damage to human or natural resources (e.g., houses or salmon redds)	points = 2	
Surface flooding problems are in a sub-basin farther down-gradient	points = 1	
No flooding problems anywhere downstream	points = 0	
R 6.2. Has the site been identified as important for flood storage or flood conveyance in a regional flood control plan?	Yes = 2 No = 0	
Total for R 6	Add the points in the boxes above	

Rating of Value If score is:___**2-4 = H** ___**1 = M** ___**0 = L** *Record the rating on the first page*

Wetland name or number A, B, C, D

LAKE FRINGE WETLANDS

Water Quality Functions - Indicators that the site functions to improve water quality

L 1.0. Does the site have the potential to improve water quality?		
L 1.1. Average width of plants along the lakeshore *(use polygons of Cowardin classes)*:		
Plants are more than 33 ft (10 m) wide	points = 6	
Plants are more than 16 ft (5 m) wide and <33 ft	points = 3	
Plants are more than 6 ft (2 m) wide and <16 ft	points = 1	
Plants are less than 6 ft wide	points = 0	
L 1.2. Characteristics of the plants in the wetland: Choose the appropriate description that results in the highest points, and do not include any open water in your estimate of coverage. The herbaceous plants can be either the dominant form or as an understory in a shrub or forest community. *These are not Cowardin classes. Areo of cover is totol cover in the unit, but it can be in patches. Herboceous does not include aquotic bed.*		
Cover of herbaceous plants is >90% of the vegetated area	points = 6	
Cover of herbaceous plants is $>^{2}/_{3}$ of the vegetated area	points = 4	
Cover of herbaceous plants is $>^{1}/_{3}$ of the vegetated area	points = 3	
Other plants that are not aquatic bed $> {}^{2}/_{3}$ unit	points = 3	
Other plants that are not aquatic bed in $> {}^{1}/_{3}$ vegetated area	points = 1	
Aquatic bed plants and open water cover $> {}^{2}/_{3}$ of the unit	points = 0	
Total for L 1	Add the points in the boxes above	

Rating of Site Potential If score is:___**8-12 = H** ___**4-7 = M** ___**0-3 = L** *Record the roting on the first poge*

L 2.0. Does the landscape have the potential to support the water quality function of the site?		
L 2.1. Is the lake used by power boats?	Yes = 1 No = 0	
L 2.2. Is > 10% of the area within 150 ft of wetland unit on the upland side in land uses that generate pollutants?	Yes = 1 No = 0	
L 2.3. Does the lake have problems with algal blooms or excessive plant growth such as milfoil?	Yes = 1 No = 0	
Total for L 2	Add the points in the boxes above	

Rating of Landscape Potential: If score is:___**2 or 3 = H** ___**1 = M** ___**0 = L** *Record the roting on the first page*

L 3.0. Is the water quality improvement provided by the site valuable to society?		
L 3.1. Is the lake on the 303(d) list of degraded aquatic resources?	Yes = 1 No = 0	
L 3.2. Is the lake in a sub-basin where water quality is an issue (at least one aquatic resource in the basin is on the 303(d) list)?	Yes = 1 No = 0	
L 3.3. Has the site been identified in a watershed or local plan as important for maintaining water quality? *Answer YES if there is o TMDL for the loke or bosin in which the unit is found.*	Yes = 2 No = 0	
Total for L 3	Add the points in the boxes above	

Rating of Value If score is:___**2-4 = H** ___**1 = M** ___**0 = L** *Record the roting on the first poge*

Wetland name or number ____

LAKE FRINGE WETLANDS **Hydrologic Functions** - Indicators that the wetland unit functions to reduce shoreline erosion	
L 4.0. Does the site have the potential to reduce shoreline erosion?	
L 4.1. Distance along shore and average width of Cowardin classes along the lakeshore (**do not** include Aquatic bed): *Choose the highest scoring description that matches conditions in the wetland* > ¾ of distance is Scrub-shrub or Forested at least 33 ft (10 m) wide — points = 6 > ¾ of distance is Scrub-shrub or Forested at least 6 ft (2 m) wide — points = 4 > ¼ distance is Scrub-shrub or Forested at least 33 ft (10 m) wide — points = 4 Plants are at least 6 ft (2 m) wide (any type except Aquatic bed) — points = 2 Plants are less than 6 ft (2 m) wide (any type except Aquatic bed) — points = 0	

Rating of Site Potential: If score is:___**6 = M** ___**0-5 = L** *Record the rating on the first page*

L 5.0. Does the landscape have the potential to support the hydrologic functions of the site?		
L 5.1. Is the lake used by power boats with more than 10 hp?	Yes = 1 No = 0	
L 5.2. Is the fetch on the lake side of the unit at least 1 mile in distance?	Yes = 1 No = 0	
Total for L 5	Add the points in the boxes above	

Rating of Landscape Potential If score is:___**2 = H** ___**1 = M** ___**0 = L** *Record the rating on the first page*

L 6.0. Are the hydrologic functions provided by the site valuable to society?	
L 6.1. Are there resources along the shore that can be impacted by erosion? If more than one resource is present, choose the one with the highest score. There are human structures or old growth/mature forests within 25 ft of OHWM of the shore in the unit — points = 2 There are nature trails or other paths and recreational activities within 25 ft of OHWM — points = 1 Other resources that could be impacted by erosion — points = 1 There are no resources that can be impacted by erosion along the shores of the unit — points = 0	

Rating of Value: If score is:___**2 = H** ___**1 = M** ___**0 = L** *Record the rating on the first page*

NOTES and FIELD OBSERVATIONS:

Wetland name or number A, B, C, D

SLOPE WETLANDS

Water Quality Functions - Indicators that the site functions to improve water quality

S 1.0. Does the site have the potential to improve water quality?	
S 1.1. Characteristics of the average slope of the wetland: *(a 1% slope has a 1 ft vertical drop in elevation for every 100 ft of horizontal distance)* Slope is 1% or less — points = 3 Slope is > 1%-2% — points = 2 Slope is > 2%-5% — points = 1 Slope is greater than 5% — points = 0	
S 1.2. The soil 2 in below the surface (or duff layer) is true clay or true organic *(use NRCS definitions)*: Yes = 3 No = 0	
S 1.3. Characteristics of the plants in the wetland that trap sediments and pollutants: Choose the points appropriate for the description that best fits the plants in the wetland. *Dense means you have trouble seeing the soil surface (>75% cover), and uncut means not grazed or mowed and plants are higher than 6 in.* Dense, uncut, herbaceous plants > 90% of the wetland area — points = 6 Dense, uncut, herbaceous plants > ½ of area — points = 3 Dense, woody, plants > ½ of area — points = 2 Dense, uncut, herbaceous plants > ¼ of area — points = 1 Does not meet any of the criteria above for plants — points = 0	
Total for S 1 — Add the points in the boxes above	

Rating of Site Potential If score is: ___**12 = H** ___**6-11 = M** ___**0-5 = L** *Record the rating on the first page*

S 2.0. Does the landscape have the potential to support the water quality function of the site?	
S 2.1. Is > 10% of the area within 150 ft on the uphill side of the wetland in land uses that generate pollutants? Yes = 1 No = 0	
S 2.2. Are there other sources of pollutants coming into the wetland that are not listed in question S 2.1? Other sources _____ Yes = 1 No = 0	
Total for S 2 — Add the points in the boxes above	

Rating of Landscape Potential If score is: ___**1-2 = M** ___**0 = L** *Record the rating on the first page*

S 3.0. Is the water quality improvement provided by the site valuable to society?	
S 3.1. Does the wetland discharge directly (i.e., within 1 mi) to a stream, river, lake, or marine water that is on the 303(d) list? Yes = 1 No = 0	
S 3.2. Is the wetland in a basin or sub-basin where water quality is an issue? *At least one aquatic resource in the basin is on the 303(d) list.* Yes = 1 No = 0	
S 3.3. Has the site been identified in a watershed or local plan as important for maintaining water quality? *Answer YES if there is a TMDL for the basin in which unit is found.* Yes = 2 No = 0	
Total for S 3 — Add the points in the boxes above	

Rating of Value If score is: ___**2-4 = H** ___**1 = M** ___**0 = L** *Record the rating on the first page*

Wetland name or number _____

SLOPE WETLANDS

Hydrologic Functions - Indicators that the site functions to reduce flooding and stream erosion

S 4.0. Does the site have the potential to reduce flooding and stream erosion?	
S 4.1. Characteristics of plants that reduce the velocity of surface flows during storms: Choose the points appropriate for the description that best fits conditions in the wetland. *Stems of plants should be thick enough (usually > $^{1}/_{8}$ in), or dense enough, to remain erect during surface flows.* Dense, uncut, **rigid** plants cover > 90% of the area of the wetland points = 1 All other conditions points = 0	

Rating of Site Potential If score is:___**1 = M** ___**0 = L** *Record the rating on the first page*

S 5.0. Does the landscape have the potential to support the hydrologic functions of the site?	
S 5.1. Is more than 25% of the area within 150 ft upslope of wetland in land uses or cover that generate excess surface runoff? Yes = 1 No = 0	

Rating of Landscape Potential If score is:___**1 = M** ___**0 = L** *Record the rating on the first page*

S 6.0. Are the hydrologic functions provided by the site valuable to society?	
S 6.1. Distance to the nearest areas downstream that have flooding problems: The sub-basin immediately down-gradient of site has flooding problems that result in damage to human or natural resources (e.g., houses or salmon redds) points = 2 Surface flooding problems are in a sub-basin farther down-gradient points = 1 No flooding problems anywhere downstream points = 0	
S 6.2. Has the site been identified as important for flood storage or flood conveyance in a regional flood control plan? Yes = 2 No = 0	
Total for S 6 Add the points in the boxes above	

Rating of Value If score is:___**2-4 = H** ___**1 = M** ___**0 = L** *Record the rating on the first page*

NOTES and FIELD OBSERVATIONS:

1775

Wetland name or number A, B, C, D

These questions apply to wetlands of all HGM classes.

HABITAT FUNCTIONS - Indicators that site functions to provide important habitat

H 1.0. Does the site have the potential to provide habitat?

H 1.1. Structure of plant community: *Indicators are Cowardin classes and strata within the Forested class.* Check the Cowardin plant classes in the wetland. *Up to 10 patches may be combined for each class to meet the threshold of ¼ ac or more than 10% of the unit if it is smaller than 2.5 ac. Add the number of structures checked.*

____Aquatic bed — 4 structures or more: points = 4
✓ Emergent — 3 structures: points = 2
____Scrub-shrub (areas where shrubs have > 30% cover) — 2 structures: points = 1
____Forested (areas where trees have > 30% cover) — 1 structure: points = 0

If the unit has a Forested class, check if:

____The Forested class has 3 out of 5 strata (canopy, sub-canopy, shrubs, herbaceous, moss/ground-cover) that each cover 20% within the Forested polygon

Ø

H 1.2. Hydroperiods

Check the types of water regimes (hydroperiods) present within the wetland. The water regime has to cover more than 10% of the wetland or ¼ ac to count (*see text for descriptions of hydroperiods*).

____Permanently flooded or inundated — 4 or more types present: points = 3
✓ Seasonally flooded or inundated — 3 types present: points = 2
____Occasionally flooded or inundated — 2 types present: points = 1
____Saturated only — 1 type present: points = 0
____Permanently flowing stream or river in, or adjacent to, the wetland
____Seasonally flowing stream in, or adjacent to, the wetland
____**Lake Fringe wetland** — **2 points**
____**Freshwater tidal wetland** — **2 points**

Ø

H 1.3. Richness of plant species

Count the number of plant species in the wetland that cover at least 10 ft^2.

Different patches of the same species can be combined to meet the size threshold and you do not have to name the species. ***Do not include Eurasian milfoil, reed canarygrass, purple loosestrife, Canadian thistle***

If you counted: > 19 species — points = 2
5 - 19 species — points = 1
< 5 species — points = 0

Ø

H 1.4. Interspersion of habitats

Decide from the diagrams below whether interspersion among Cowardin plants classes (described in H 1.1), or the classes and unvegetated areas (can include open water or mudflats) is high, moderate, low, or none. *If you have four or more plant classes or three classes and open water, the rating is always high.*

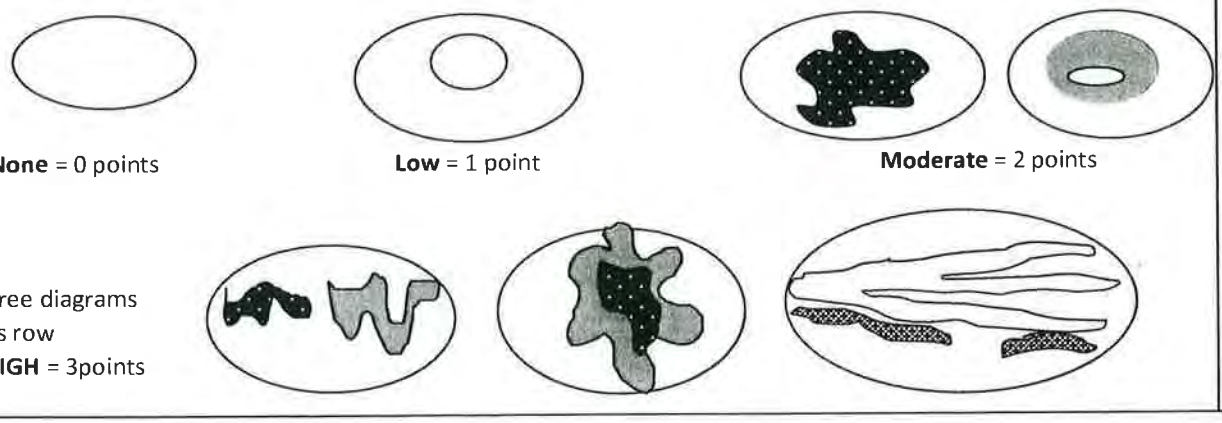

None = 0 points — **Low** = 1 point — **Moderate** = 2 points

All three diagrams in this row are **HIGH** = 3points

Ø

Wetland name or number ____

H 1.5. Special habitat features: Check the habitat features that are present in the wetland. *The number of checks is the number of points.* ____Large, downed, woody debris within the wetland (> 4 in diameter and 6 ft long). ____Standing snags (dbh > 4 in) within the wetland ____Undercut banks are present for at least 6.6 ft (2 m) **and/or** overhanging plants extends at least 3.3 ft (1 m) over a stream (or ditch) in, or contiguous with the wetland, for at least 33 ft (10 m) ____Stable steep banks of fine material that might be used by beaver or muskrat for denning (> 30 degree slope) OR signs of recent beaver activity are present *(cut shrubs or trees that have not yet weathered where wood is exposed)* ____At least ¼ ac of thin-stemmed persistent plants or woody branches are present in areas that are permanently or seasonally inundated *(structures for egg-laying by amphibians)* ____Invasive plants cover less than 25% of the wetland area in every stratum of plants (*see H 1.1 for list of strata*)	Ø
Total for H 1 — Add the points in the boxes above	Ø

Rating of Site Potential If score is:___**15-18 = H** ___**7-14 = M** ✓**0-6 = L** *Record the rating on the first page*

H 2.0. Does the landscape have the potential to support the habitat functions of the site?	
H 2.1. Accessible habitat (include *only habitat that directly abuts wetland unit*). *Calculate:* % undisturbed habitat___ + [(% moderate and low intensity land uses)/2]___ = _____% If total accessible habitat is: > $^{1}/_{3}$ (33.3%) of 1 km Polygon — points = 3 20-33% of 1 km Polygon — points = 2 10-19% of 1 km Polygon — points = 1 < 10% of 1 km Polygon — points = 0	1
H 2.2. Undisturbed habitat in 1 km Polygon around the wetland. *Calculate:* % undisturbed habitat___ + [(% moderate and low intensity land uses)/2]___ = _____% Undisturbed habitat > 50% of Polygon — points = 3 Undisturbed habitat 10-50% and in 1-3 patches — points = 2 Undisturbed habitat 10-50% and > 3 patches — points = 1 Undisturbed habitat < 10% of 1 km Polygon — points = 0	1
H 2.3. Land use intensity in 1 km Polygon: If > 50% of 1 km Polygon is high intensity land use — points = (- 2) ≤ 50% of 1 km Polygon is high intensity — points = 0	-2
Total for H 2 — Add the points in the boxes above	Ø

Rating of Landscape Potential If score is:___**4-6 = H** ___**1-3 = M** ✓**< 1 = L** *Record the rating on the first page*

H 3.0. Is the habitat provided by the site valuable to society?	
H 3.1. Does the site provide habitat for species valued in laws, regulations, or policies? *Choose only the highest score that applies to the wetland being rated.* Site meets ANY of the following criteria: — points = 2 ✓ It has 3 or more priority habitats within 100 m (see next page) — It provides habitat for Threatened or Endangered species (any plant or animal on the state or federal lists) — It is mapped as a location for an individual WDFW priority species — It is a Wetland of High Conservation Value as determined by the Department of Natural Resources — It has been categorized as an important habitat site in a local or regional comprehensive plan, in a Shoreline Master Plan, or in a watershed plan Site has 1 or 2 priority habitats (listed on next page) within 100 m — points = 1 Site does not meet any of the criteria above — points = 0	2

Rating of Value If score is:___**2 = H** ___**1 = M** ___**0 = L** *Record the rating on the first page*

Wetland name or number A, B, C, D

WDFW Priority Habitats

Priority habitats listed by WDFW (see complete descriptions of WDFW priority habitats, and the counties in which they can be found, in: Washington Department of Fish and Wildlife. 2008. Priority Habitat and Species List. Olympia, Washington. 177 pp. http://wdfw.wa.gov/publications/00165/wdfw00165.pdf or access the list from here: http://wdfw.wa.gov/conservation/phs/list/)

Count how many of the following priority habitats are within 330 ft (100 m) of the wetland unit: ***NOTE:*** *This question is independent of the land use between the wetland unit and the priority habitat.*

— **Aspen Stands:** Pure or mixed stands of aspen greater than 1 ac (0.4 ha).

— **Biodiversity Areas and Corridors**: Areas of habitat that are relatively important to various species of native fish and wildlife (*full descriptions in WDFW PHS report*).

— **Herbaceous Balds:** Variable size patches of grass and forbs on shallow soils over bedrock.

— **Old-growth/Mature forests:** Old-growth west of Cascade crest – Stands of at least 2 tree species, forming a multi-layered canopy with occasional small openings; with at least 8 trees/ac (20 trees/ha) > 32 in (81 cm) dbh or > 200 years of age. Mature forests – Stands with average diameters exceeding 21 in (53 cm) dbh; crown cover may be less than 100%; decay, decadence, numbers of snags, and quantity of large downed material is generally less than that found in old-growth; 80-200 years old west of the Cascade crest.

— **Oregon White Oak:** Woodland stands of pure oak or oak/conifer associations where canopy coverage of the oak component is important (*full descriptions in WDFW PHS report p. 158 – see web link above*).

— **Riparian**: The area adjacent to aquatic systems with flowing water that contains elements of both aquatic and terrestrial ecosystems which mutually influence each other.

— **Westside Prairies:** Herbaceous, non-forested plant communities that can either take the form of a dry prairie or a wet prairie (*full descriptions in WDFW PHS report p. 161 – see web link above*).

— **Instream:** The combination of physical, biological, and chemical processes and conditions that interact to provide functional life history requirements for instream fish and wildlife resources.

— **Nearshore**: Relatively undisturbed nearshore habitats. These include Coastal Nearshore, Open Coast Nearshore, and Puget Sound Nearshore. (*full descriptions of habitats and the definition of relatively undisturbed are in WDFW report – see web link on previous page).*

— **Caves:** A naturally occurring cavity, recess, void, or system of interconnected passages under the earth in soils, rock, ice, or other geological formations and is large enough to contain a human.

— **Cliffs:** Greater than 25 ft (7.6 m) high and occurring below 5000 ft elevation.

— **Talus:** Homogenous areas of rock rubble ranging in average size 0.5 - 6.5 ft (0.15 - 2.0 m), composed of basalt, andesite, and/or sedimentary rock, including riprap slides and mine tailings. May be associated with cliffs.

— **Snags and Logs:** Trees are considered snags if they are dead or dying and exhibit sufficient decay characteristics to enable cavity excavation/use by wildlife. Priority snags have a diameter at breast height of > 20 in (51 cm) in western Washington and are > 6.5 ft (2 m) in height. Priority logs are > 12 in (30 cm) in diameter at the largest end, and > 20 ft (6 m) long.

Note: All vegetated wetlands are by definition a priority habitat but are not included in this list because they are addressed elsewhere.

Wetland name or number _____

CATEGORIZATION BASED ON SPECIAL CHARACTERISTICS

Wetland Type *Check off any criteria that apply to the wetland. Circle the category when the appropriate criteria are met.*	**Category**
SC 1.0. Estuarine wetlands Does the wetland meet the following criteria for Estuarine wetlands? — The dominant water regime is tidal, — Vegetated, and — With a salinity greater than 0.5 ppt Yes –Go to **SC 1.1** No= **Not an estuarine wetland**	
SC 1.1. Is the wetland within a National Wildlife Refuge, National Park, National Estuary Reserve, Natural Area Preserve, State Park or Educational, Environmental, or Scientific Reserve designated under WAC 332-30-151? Yes = **Category I** No - Go to **SC 1.2**	**Cat. I**
SC 1.2. Is the wetland unit at least 1 ac in size and meets at least two of the following three conditions? — The wetland is relatively undisturbed (has no diking, ditching, filling, cultivation, grazing, and has less than 10% cover of non-native plant species. (If non-native species are *Spartina*, see page 25) — At least ¾ of the landward edge of the wetland has a 100 ft buffer of shrub, forest, or un-grazed or un-mowed grassland. — The wetland has at least two of the following features: tidal channels, depressions with open water, or contiguous freshwater wetlands. Yes = **Category I** No = **Category II**	**Cat. I** **Cat. II**
SC 2.0. Wetlands of High Conservation Value (WHCV) SC 2.1. Has the WA Department of Natural Resources updated their website to include the list of Wetlands of High Conservation Value? Yes – Go to **SC 2.2** No – Go to **SC 2.3** SC 2.2. Is the wetland listed on the WDNR database as a Wetland of High Conservation Value? Yes = **Category I** No = **Not a WHCV** SC 2.3. Is the wetland in a Section/Township/Range that contains a Natural Heritage wetland? http://www1.dnr.wa.gov/nhp/refdesk/datasearch/wnhpwetlands.pdf Yes – **Contact WNHP/WDNR and go to SC 2.4** No = **Not a WHCV** SC 2.4. Has WDNR identified the wetland within the S/T/R as a Wetland of High Conservation Value and listed it on their website? Yes = **Category I** No = **Not a WHCV**	**Cat. I**
SC 3.0. Bogs Does the wetland (or any part of the unit) meet both the criteria for soils and vegetation in bogs? *Use the key below.* ***If you answer YES you will still need to rate the wetland based on its functions.*** SC 3.1. Does an area within the wetland unit have organic soil horizons, either peats or mucks, that compose 16 in or more of the first 32 in of the soil profile? Yes – Go to **SC 3.3** No – Go to **SC 3.2** SC 3.2. Does an area within the wetland unit have organic soils, either peats or mucks, that are less than 16 in deep over bedrock, or an impermeable hardpan such as clay or volcanic ash, or that are floating on top of a lake or pond? Yes – Go to **SC 3.3** No = **Is not a bog** SC 3.3. Does an area with peats or mucks have more than 70% cover of mosses at ground level, AND at least a 30% cover of plant species listed in Table 4? Yes = **is a Category i bog** No – Go to **SC 3.4** **NOTE**: If you are uncertain about the extent of mosses in the understory, you may substitute that criterion by measuring the pH of the water that seeps into a hole dug at least 16 in deep. If the pH is less than 5.0 and the plant species in Table 4 are present, the wetland is a bog. SC 3.4. Is an area with peats or mucks forested (> 30% cover) with Sitka spruce, subalpine fir, western red cedar, western hemlock, lodgepole pine, quaking aspen, Engelmann spruce, or western white pine, AND any of the species (or combination of species) listed in Table 4 provide more than 30% of the cover under the canopy? Yes = **Is a Category I bog** No = **Is not a bog**	**Cat. I**

Wetland name or number A, B, C, D

SC 4.0. Forested Wetlands Does the wetland have at least 1 contiguous acre of forest that meets one of these criteria for the WA Department of Fish and Wildlife's forests as priority habitats? ***If you answer YES you will still need to rate the wetland based on its functions.*** — **Old-growth forests** (west of Cascade crest): Stands of at least two tree species, forming a multi-layered canopy with occasional small openings; with at least 8 trees/ac (20 trees/ha) that are at least 200 years of age OR have a diameter at breast height (dbh) of 32 in (81 cm) or more. — **Mature forests** (west of the Cascade Crest): Stands where the largest trees are 80- 200 years old OR the species that make up the canopy have an average diameter (dbh) exceeding 21 in (53 cm). Yes = **Category I** No = **Not a forested wetland for this section**	**Cat. I**
SC 5.0. Wetlands in Coastal Lagoons Does the wetland meet all of the following criteria of a wetland in a coastal lagoon? — The wetland lies in a depression adjacent to marine waters that is wholly or partially separated from marine waters by sandbanks, gravel banks, shingle, or, less frequently, rocks — The lagoon in which the wetland is located contains ponded water that is saline or brackish (> 0.5 ppt) during most of the year in at least a portion of the lagoon *(needs to be measured near the bottom)* Yes – Go to **SC 5.1** No = **Not a wetland in a coastal lagoon**	**Cat. I**
SC 5.1. Does the wetland meet all of the following three conditions? — The wetland is relatively undisturbed (has no diking, ditching, filling, cultivation, grazing), and has less than 20% cover of aggressive, opportunistic plant species (see list of species on p. 100). — At least ¾ of the landward edge of the wetland has a 100 ft buffer of shrub, forest, or un-grazed or un-mowed grassland. — The wetland is larger than $^{1}/_{10}$ ac (4350 ft^2) Yes = **Category I** No = **Category II**	**Cat. II**
SC 6.0. Interdunal Wetlands Is the wetland west of the 1889 line (also called the Western Boundary of Upland Ownership or WBUO)? ***If you answer yes you will still need to rate the wetland based on its habitat functions.*** In practical terms that means the following geographic areas: — Long Beach Peninsula: Lands west of SR 103 — Grayland-Westport: Lands west of SR 105 — Ocean Shores-Copalis: Lands west of SR 115 and SR 109 Yes – Go to **SC 6.1** No = **not an interdunal wetland for rating**	**Cat I**
SC 6.1. Is the wetland 1 ac or larger and scores an 8 or 9 for the habitat functions on the form (rates H,H,H or H,H,M for the three aspects of function)? Yes = **Category I** No – Go to **SC 6.2**	**Cat. II**
SC 6.2. Is the wetland 1 ac or larger, or is it in a mosaic of wetlands that is 1 ac or larger? Yes = **Category II** No – Go to **SC 6.3**	**Cat. III**
SC 6.3. Is the unit between 0.1 and 1 ac, or is it in a mosaic of wetlands that is between 0.1 and 1 ac? Yes = **Category III** No = **Category IV**	**Cat. IV**
Category of wetland based on Special Characteristics If you answered No for all types, enter "Not Applicable" on Summary Form	

This page left blank intentionally

TAL-1775

Wetland name or number E

RATING SUMMARY – Western Washington

Name of wetland (or ID #): Wetland E Date of site visit: 10/8/18

Rated by J. Marriott Trained by Ecology? ✓ Yes ___ No Date of training 4/2015

HGM Class used for rating Depress (Slope) Wetland has multiple HGM classes? ✓ Y ___ N

NOTE: Form is not complete without the figures requested *(figures can be combined).*

Source of base aerial photo/map _____

OVERALL WETLAND CATEGORY ____ (based on functions___ or special characteristics___)

1. Category of wetland based on FUNCTIONS

_____**Category I** – Total score = 23 - 27

_____**Category II** – Total score = 20 - 22

✓ **Category III** – Total score = 16 - 19

_____**Category IV** – Total score = 9 - 15

75'

FUNCTION	Improving Water Quality	Hydrologic	Habitat	
	Circle the appropriate ratings			
Site Potential	H (M) L	H M (L)	H (M) L	
Landscape Potential	H (M) L	H (M) L	H M (L)	
Value	(H) M L	(H) M L	(H) M L	**TOTAL**
Score Based on Ratings	7	6	6	19

Score for each function based on three ratings *(order of ratings is not important)*

9 = H,H,H
8 = H,H,M
7 = H,H,L
7 = H,M,M
6 = H,M,L
6 = M,M,M
5 = H,L,L
5 = M,M,L
4 = M,L,L
3 = L,L,L

2. Category based on SPECIAL CHARACTERISTICS of wetland

CHARACTERISTIC	CATEGORY
Estuarine	I II
Wetland of High Conservation Value	I
Bog	I
Mature Forest	I
Old Growth Forest	I
Coastal Lagoon	I II
Interdunal	I II III IV
None of the above	

Wetland name or number ____

Maps and figures required to answer questions correctly for Western Washington

Depressional Wetlands

Map of:	To answer questions:	Figure #
Cowardin plant classes	D 1.3, H 1.1, H 1.4	
Hydroperiods	D 1.4, H 1.2	
Location of outlet (*can be added to map of hydroperiods)*	D 1.1, D 4.1	
Boundary of area within 150 ft of the wetland *(can be added to another figure)*	D 2.2, D 5.2	
Map of the contributing basin	D 4.3, D 5.3	
1 km Polygon: Area that extends 1 km from entire wetland edge - including polygons for accessible habitat and undisturbed habitat	H 2.1, H 2.2, H 2.3	
Screen capture of map of 303(d) listed waters in basin (from Ecology website)	D 3.1, D 3.2	
Screen capture of list of TMDLs for WRIA in which unit is found (from web)	D 3.3	

Riverine Wetlands

Map of:	To answer questions:	Figure #
Cowardin plant classes	H 1.1, H 1.4	
Hydroperiods	H 1.2	
Ponded depressions	R 1.1	
Boundary of area within 150 ft of the wetland *(can be added to another figure)*	R 2.4	
Plant cover of trees, shrubs, and herbaceous plants	R 1.2, R 4.2	
Width of unit vs. width of stream *(can be added to another figure)*	R 4.1	
Map of the contributing basin	R 2.2, R 2.3, R 5.2	
1 km Polygon: Area that extends 1 km from entire wetland edge - including polygons for accessible habitat and undisturbed habitat	H 2.1, H 2.2, H 2.3	
Screen capture of map of 303(d) listed waters in basin (from Ecology website)	R 3.1	
Screen capture of list of TMDLs for WRIA in which unit is found (from web)	R 3.2, R 3.3	

Lake Fringe Wetlands

Map of:	To answer questions:	Figure #
Cowardin plant classes	L 1.1, L 4.1, H 1.1, H 1.4	
Plant cover of trees, shrubs, and herbaceous plants	L 1.2	
Boundary of area within 150 ft of the wetland *(can be added to another figure)*	L 2.2	
1 km Polygon: Area that extends 1 km from entire wetland edge - including polygons for accessible habitat and undisturbed habitat	H 2.1, H 2.2, H 2.3	
Screen capture of map of 303(d) listed waters in basin (from Ecology website)	L 3.1, L 3.2	
Screen capture of list of TMDLs for WRIA in which unit is found (from web)	L 3.3	

Slope Wetlands

Map of:	To answer questions:	Figure #
Cowardin plant classes	H 1.1, H 1.4	
Hydroperiods	H 1.2	
Plant cover of **dense** trees, shrubs, and herbaceous plants	S 1.3	
Plant cover of **dense, rigid** trees, shrubs, and herbaceous plants *(can be added to figure above)*	S 4.1	
Boundary of 150 ft buffer (can be added to another figure)	S 2.1, S 5.1	
1 km Polygon: Area that extends 1 km from entire wetland edge - including polygons for accessible habitat and undisturbed habitat	H 2.1, H 2.2, H 2.3	
Screen capture of map of 303(d) listed waters in basin (from Ecology website)	S 3.1, S 3.2	
Screen capture of list of TMDLs for WRIA in which unit is found (from web)	S 3.3	

Wetland name or number E

HGM Classification of Wetlands in Western Washington

For questions 1-7, the criteria described must apply to the entire unit being rated.

If the hydrologic criteria listed in each question do not apply to the entire unit being rated, you probably have a unit with multiple HGM classes. In this case, identify which hydrologic criteria in questions 1-7 apply, and go to Question 8.

1. Are the water levels in the entire unit usually controlled by tides except during floods?

   NO – go to 2 **YES** – the wetland class is **Tidal Fringe** – go to 1.1

   1.1 Is the salinity of the water during periods of annual low flow below 0.5 ppt (parts per thousand)?

   NO – Saltwater Tidal Fringe (Estuarine) **YES – Freshwater Tidal Fringe**
   *If your wetland can be classified as a Freshwater Tidal Fringe use the forms for **Riverine** wetlands. If it is Saltwater Tidal Fringe it is an **Estuarine** wetland and is not scored. This method **cannot** be used to score functions for estuarine wetlands.*

2. The entire wetland unit is flat and precipitation is the only source (>90%) of water to it. Groundwater and surface water runoff are NOT sources of water to the unit.

   NO – go to 3 **YES** – The wetland class is **Flats**
   *If your wetland can be classified as a Flats wetland, use the form for **Depressional** wetlands.*

3. Does the entire wetland unit **meet all** of the following criteria?
   ___The vegetated part of the wetland is on the shores of a body of permanent open water (without any plants on the surface at any time of the year) at least 20 ac (8 ha) in size;
   ___At least 30% of the open water area is deeper than 6.6 ft (2 m).

   NO – go to 4 **YES –** The wetland class is **Lake Fringe** (Lacustrine Fringe)

4. Does the entire wetland unit **meet all** of the following criteria?
   ___The wetland is on a slope (*slope can be very gradual*),
   ___The water flows through the wetland in one direction (unidirectional) and usually comes from seeps. It may flow subsurface, as sheetflow, or in a swale without distinct banks,
   ___The water leaves the wetland **without being impounded**.

   NO – go to 5 **YES –** The wetland class is **Slope**

   NOTE: Surface water does not pond in these type of wetlands except occasionally in very small and shallow depressions or behind hummocks (depressions are usually <3 ft diameter and less than 1 ft deep).

5. Does the entire wetland unit **meet all** of the following criteria?
   ___The unit is in a valley, or stream channel, where it gets inundated by overbank flooding from that stream or river,
   ___The overbank flooding occurs at least once every 2 years.

Wetland name or number _____

NO – go to 6 **YES** – The wetland class is **Riverine**

NOTE: The Riverine unit can contain depressions that are filled with water when the river is not flooding

6. Is the entire wetland unit in a topographic depression in which water ponds, or is saturated to the surface, at some time during the year? *This means that any outlet, if present, is higher than the interior of the wetland.*

NO – go to 7 **YES** – The wetland class is **Depressional**

7. Is the entire wetland unit located in a very flat area with no obvious depression and no overbank flooding? The unit does not pond surface water more than a few inches. The unit seems to be maintained by high groundwater in the area. The wetland may be ditched, but has no obvious natural outlet.

NO – go to 8 **YES** – The wetland class is **Depressional**

8. Your wetland unit seems to be difficult to classify and probably contains several different HGM classes. For example, seeps at the base of a slope may grade into a riverine floodplain, or a small stream within a Depressional wetland has a zone of flooding along its sides. GO BACK AND IDENTIFY WHICH OF THE HYDROLOGIC REGIMES DESCRIBED IN QUESTIONS 1-7 APPLY TO DIFFERENT AREAS IN THE UNIT (make a rough sketch to help you decide). Use the following table to identify the appropriate class to use for the rating system if you have several HGM classes present within the wetland unit being scored.

NOTE: Use this table only if the class that is recommended in the second column represents 10% or more of the total area of the wetland unit being rated. If the area of the HGM class listed in column 2 is less than 10% of the unit; classify the wetland using the class that represents more than 90% of the total area.

HGM classes within the wetland unit being rated	HGM class to use in rating
Slope + Riverine	Riverine
Slope + Depressional	Depressional
Slope + Lake Fringe	Lake Fringe
Depressional + Riverine along stream within boundary of depression	Depressional
Depressional + Lake Fringe	Depressional
Riverine + Lake Fringe	Riverine
Salt Water Tidal Fringe and any other class of freshwater wetland	Treat as ESTUARINE

If you are still unable to determine which of the above criteria apply to your wetland, or if you have ***more than 2 HGM classes*** *within a wetland boundary, classify the wetland as Depressional for the rating.*

1775

Wetland name or number E

DEPRESSIONAL AND FLATS WETLANDS

Water Quality Functions - Indicators that the site functions to improve water quality

D 1.0. Does the site have the potential to improve water quality?	
D 1.1. Characteristics of surface water outflows from the wetland: Wetland is a depression or flat depression (QUESTION 7 on key) with no surface water leaving it (no outlet). points = 3 Wetland has an intermittently flowing stream or ditch, OR highly constricted permanently flowing outlet. points = 2 Wetland has an unconstricted, or slightly constricted, surface outlet that is permanently flowing points = 1 Wetland is a flat depression (QUESTION 7 on key), whose outlet is a permanently flowing ditch. points = 1	1
D 1.2. The soil 2 in below the surface (or duff layer) is true clay or true organic *(use NRCS definitions)*. Yes = 4 No = 0	Ø
D 1.3. Characteristics and distribution of persistent plants (Emergent, Scrub-shrub, and/or Forested Cowardin classes): Wetland has persistent, ungrazed, plants > 95% of area points = 5 Wetland has persistent, ungrazed, plants > ½ of area points = 3 Wetland has persistent, ungrazed plants > $^{1}/_{10}$ of area points = 1 Wetland has persistent, ungrazed plants < $^{1}/_{10}$ of area points = 0	5
D 1.4. Characteristics of seasonal ponding or inundation: *This is the area that is ponded for at least 2 months. See description in manual.* Area seasonally ponded is > ½ total area of wetland points = 4 Area seasonally ponded is > ¼ total area of wetland points = 2 Area seasonally ponded is < ¼ total area of wetland points = 0	2
Total for D 1 Add the points in the boxes above	8

Rating of Site Potential If score is: ___ **12-16 = H** ✓ **6-11 = M** ___ **0-5 = L** *Record the rating on the first page*

D 2.0. Does the landscape have the potential to support the water quality function of the site?	
D 2.1. Does the wetland unit receive stormwater discharges? Yes = 1 No = 0	Ø
D 2.2. Is > 10% of the area within 150 ft of the wetland in land uses that generate pollutants? Yes = 1 No = 0	1
D 2.3. Are there septic systems within 250 ft of the wetland? Yes = 1 No = 0	Ø
D 2.4. Are there other sources of pollutants coming into the wetland that are not listed in questions D 2.1-D 2.3? Source_____ Yes = 1 No = 0	Ø
Total for D 2 Add the points in the boxes above	1

Rating of Landscape Potential If score is: ___ **3 or 4 = H** ✓ **1 or 2 = M** ___ **0 = L** *Record the rating on the first page*

D 3.0. Is the water quality improvement provided by the site valuable to society?	
D 3.1. Does the wetland discharge directly (i.e., within 1 mi) to a stream, river, lake, or marine water that is on the 303(d) list? Yes = 1 No = 0	1
D 3.2. Is the wetland in a basin or sub-basin where an aquatic resource is on the 303(d) list? Yes = 1 No = 0	1
D 3.3. Has the site been identified in a watershed or local plan as important for maintaining water quality (*answer YES if there is a TMDL for the basin in which the unit is found*)? Yes = 2 No = 0	2
Total for D 3 Add the points in the boxes above	4

Rating of Value If score is: ✓ **2-4 = H** ___ **1 = M** ___ **0 = L** *Record the rating on the first page*

Wetland name or number

DEPRESSIONAL AND FLATS WETLANDS

Hydrologic Functions - Indicators that the site functions to reduce flooding and stream degradation

D 4.0. Does the site have the potential to reduce flooding and erosion?	
D 4.1. Characteristics of surface water outflows from the wetland: Wetland is a depression or flat depression with no surface water leaving it (no outlet) points = 4 Wetland has an intermittently flowing stream or ditch, OR highly constricted permanently flowing outlet points = 2 Wetland is a flat depression (QUESTION 7 on key), whose outlet is a permanently flowing ditch points = 1 Wetland has an unconstricted, or slightly constricted, surface outlet that is permanently flowing points = 0	Ø
D 4.2. Depth of storage during wet periods: *Estimate the height of ponding above the bottom of the outlet. For wetlands with no outlet, measure from the surface of permanent water or if dry, the deepest part.* Marks of ponding are 3 ft or more above the surface or bottom of outlet points = 7 Marks of ponding between 2 ft to < 3 ft from surface or bottom of outlet points = 5 Marks are at least 0.5 ft to < 2 ft from surface or bottom of outlet points = 3 The wetland is a "headwater" wetland points = 3 Wetland is flat but has small depressions on the surface that trap water points = 1 Marks of ponding less than 0.5 ft (6 in) points = 0	Ø
D 4.3. Contribution of the wetland to storage in the watershed: *Estimate the ratio of the area of upstream basin contributing surface water to the wetland to the area of the wetland unit itself.* The area of the basin is less than 10 times the area of the unit points = 5 The area of the basin is 10 to 100 times the area of the unit points = 3 The area of the basin is more than 100 times the area of the unit points = 0 Entire wetland is in the Flats class points = 5	5
Total for D 4 — Add the points in the boxes above	5

Rating of Site Potential If score is: ___ **12-16 = H** ___ **6-11 = M** ✓ **0-5 = L** *Record the rating on the first page*

D 5.0. Does the landscape have the potential to support hydrologic functions of the site?	
D 5.1. Does the wetland receive stormwater discharges? Yes = 1 No = 0	Ø
D 5.2. Is >10% of the area within 150 ft of the wetland in land uses that generate excess runoff? Yes = 1 No = 0	1
D 5.3. Is more than 25% of the contributing basin of the wetland covered with intensive human land uses (residential at >1 residence/ac, urban, commercial, agriculture, etc.)? Yes = 1 No = 0	Ø
Total for D 5 — Add the points in the boxes above	1

Rating of Landscape Potential If score is: ___ **3 = H** ✓ **1 or 2 = M** ___ **0 = L** *Record the rating on the first page*

D 6.0. Are the hydrologic functions provided by the site valuable to society?	
D 6.1. The unit is in a landscape that has flooding problems. *Choose the description that best matches conditions around the wetland unit being rated. Do not add points. Choose the highest score if more than one condition is met.* The wetland captures surface water that would otherwise flow down-gradient into areas where flooding has damaged human or natural resources (e.g., houses or salmon redds): • Flooding occurs in a sub-basin that is immediately down-gradient of unit. points = 2 • Surface flooding problems are in a sub-basin farther down-gradient. points = 1 Flooding from groundwater is an issue in the sub-basin. points = 1 The existing or potential outflow from the wetland is so constrained by human or natural conditions that the water stored by the wetland cannot reach areas that flood. *Explain why* _____ points = 0 There are no problems with flooding downstream of the wetland. points = 0	2
D 6.2. Has the site been identified as important for flood storage or flood conveyance in a regional flood control plan? Yes = 2 No = 0	Ø
Total for D 6 — Add the points in the boxes above	2

Rating of Value If score is: ✓ **2-4 = H** ___ **1 = M** ___ **0 = L** *Record the rating on the first page*

1775

Wetland name or number E

RIVERINE AND FRESHWATER TIDAL FRINGE WETLANDS

Water Quality Functions - Indicators that the site functions to improve water quality

R 1.0. Does the site have the potential to improve water quality?		
R 1.1. Area of surface depressions within the Riverine wetland that can trap sediments during a flooding event:		
Depressions cover >$^3/_4$ area of wetland	points = 8	
Depressions cover > ½ area of wetland	points = 4	
Depressions present but cover < ½ area of wetland	points = 2	
No depressions present	points = 0	
R 1.2. Structure of plants in the wetland (areas with >90% cover at person height, **not** Cowardin classes)		
Trees or shrubs > $^2/_3$ area of the wetland	points = 8	
Trees or shrubs > $^1/_3$ area of the wetland	points = 6	
Herbaceous plants (> 6 in high) > $^2/_3$ area of the wetland	points = 6	
Herbaceous plants (> 6 in high) > $^1/_3$ area of the wetland	points = 3	
Trees, shrubs, and ungrazed herbaceous < $^1/_3$ area of the wetland	points = 0	
Total for R 1	Add the points in the boxes above	

Rating of Site Potential If score is:___**12-16 = H** ___**6-11 = M** ___**0-5 = L** *Record the rating on the first page*

R 2.0. Does the landscape have the potential to support the water quality function of the site?		
R 2.1. Is the wetland within an incorporated city or within its UGA?	Yes = 2 No = 0	
R 2.2. Does the contributing basin to the wetland include a UGA or incorporated area?	Yes = 1 No = 0	
R 2.3. Does at least 10% of the contributing basin contain tilled fields, pastures, or forests that have been clearcut within the last 5 years?	Yes = 1 No = 0	
R 2.4. Is > 10% of the area within 150 ft of the wetland in land uses that generate pollutants?	Yes = 1 No = 0	
R 2.5. Are there other sources of pollutants coming into the wetland that are not listed in questions R 2.1-R 2.4 Other sources _____	Yes = 1 No = 0	
Total for R 2	Add the points in the boxes above	

Rating of Landscape Potential If score is:___**3-6 = H** ___**1 or 2 = M** ___**0 = L** *Record the rating on the first page*

R 3.0. Is the water quality improvement provided by the site valuable to society?		
R 3.1. Is the wetland along a stream or river that is on the 303(d) list or on a tributary that drains to one within 1 mi?	Yes = 1 No = 0	
R 3.2. Is the wetland along a stream or river that has TMDL limits for nutrients, toxics, or pathogens?	Yes = 1 No = 0	
R 3.3. Has the site been identified in a watershed or local plan as important for maintaining water quality? (*answer YES if there is a TMDL for the drainage in which the unit is found*)	Yes = 2 No = 0	
Total for R 3	Add the points in the boxes above	

Rating of Value If score is:___**2-4 = H** ___**1 = M** ___**0 = L** *Record the rating on the first page*

Wetland name or number ____

RIVERINE AND FRESHWATER TIDAL FRINGE WETLANDS

Hydrologic Functions - Indicators that site functions to reduce flooding and stream erosion

R 4.0. Does the site have the potential to reduce flooding and erosion?		
R 4.1. Characteristics of the overbank storage the wetland provides: *Estimate the average width of the wetland perpendicular to the direction of the flow and the width of the stream or river channel (distance between banks). Calculate the ratio: (average width of wetland)/(average width of stream between banks).*		
If the ratio is more than 20	points = 9	
If the ratio is 10-20	points = 6	
If the ratio is 5-<10	points = 4	
If the ratio is 1-<5	points = 2	
If the ratio is < 1	points = 1	
R 4.2. Characteristics of plants that slow down water velocities during floods: *Treat large woody debris as forest or shrub. Choose the points appropriate for the best description (polygons need to have >90% cover at person height. These are NOT Cowardin classes).*		
Forest or shrub for > $^1/_3$ area OR emergent plants > $^2/_3$ area	points = 7	
Forest or shrub for > $^1/_{10}$ area OR emergent plants > $^1/_3$ area	points = 4	
Plants do not meet above criteria	points = 0	
Total for R 4	Add the points in the boxes above	

Rating of Site Potential If score is:___**12-16 = H** ___**6-11 = M** ___**0-5 = L** *Record the rating on the first page*

R 5.0. Does the landscape have the potential to support the hydrologic functions of the site?		
R 5.1. Is the stream or river adjacent to the wetland downcut?	Yes = 0 No = 1	
R 5.2. Does the up-gradient watershed include a UGA or incorporated area?	Yes = 1 No = 0	
R 5.3. Is the up-gradient stream or river controlled by dams?	Yes = 0 No = 1	
Total for R 5	Add the points in the boxes above	

Rating of Landscape Potential If score is:___**3 = H** ___**1 or 2 = M** ___**0 = L** *Record the rating on the first page*

R 6.0. Are the hydrologic functions provided by the site valuable to society?		
R 6.1. Distance to the nearest areas downstream that have flooding problems? *Choose the description that best fits the site.*		
The sub-basin immediately down-gradient of the wetland has flooding problems that result in damage to human or natural resources (e.g., houses or salmon redds)	points = 2	
Surface flooding problems are in a sub-basin farther down-gradient	points = 1	
No flooding problems anywhere downstream	points = 0	
R 6.2. Has the site been identified as important for flood storage or flood conveyance in a regional flood control plan?	Yes = 2 No = 0	
Total for R 6	Add the points in the boxes above	

Rating of Value If score is:___**2-4 = H** ___**1 = M** ___**0 = L** *Record the rating on the first page*

Wetland name or number E

LAKE FRINGE WETLANDS

Water Quality Functions - Indicators that the site functions to improve water quality

L 1.0. Does the site have the potential to improve water quality?		
L 1.1. Average width of plants along the lakeshore *(use polygons of Cowardin classes)*:		
Plants are more than 33 ft (10 m) wide	points = 6	
Plants are more than 16 ft (5 m) wide and <33 ft	points = 3	
Plants are more than 6 ft (2 m) wide and <16 ft	points = 1	
Plants are less than 6 ft wide	points = 0	
L 1.2. Characteristics of the plants in the wetland: Choose the appropriate description that results in the highest points, and do not include any open water in your estimate of coverage. The herbaceous plants can be either the dominant form or as an understory in a shrub or forest community. *These are not Cowardin classes. Area of cover is total cover in the unit, but it can be in patches. Herbaceous does not include aquatic bed.*		
Cover of herbaceous plants is >90% of the vegetated area	points = 6	
Cover of herbaceous plants is >$^2/_3$ of the vegetated area	points = 4	
Cover of herbaceous plants is >$^1/_3$ of the vegetated area	points = 3	
Other plants that are not aquatic bed > $^2/_3$ unit	points = 3	
Other plants that are not aquatic bed in > $^1/_3$ vegetated area	points = 1	
Aquatic bed plants and open water cover > $^2/_3$ of the unit	points = 0	
Total for L 1	Add the points in the boxes above	

Rating of Site Potential If score is:___**8-12 = H** ___**4-7 = M** ___**0-3 = L** *Record the rating on the first page*

L 2.0. Does the landscape have the potential to support the water quality function of the site?		
L 2.1. Is the lake used by power boats?	Yes = 1 No = 0	
L 2.2. Is > 10% of the area within 150 ft of wetland unit on the upland side in land uses that generate pollutants?	Yes = 1 No = 0	
L 2.3. Does the lake have problems with algal blooms or excessive plant growth such as milfoil?	Yes = 1 No = 0	
Total for L 2	Add the points in the boxes above	

Rating of Landscape Potential: If score is:___**2 or 3 = H** ___**1 = M** ___**0 = L** *Record the rating on the first page*

L 3.0. Is the water quality improvement provided by the site valuable to society?		
L 3.1. Is the lake on the 303(d) list of degraded aquatic resources?	Yes = 1 No = 0	
L 3.2. Is the lake in a sub-basin where water quality is an issue (at least one aquatic resource in the basin is on the 303(d) list)?	Yes = 1 No = 0	
L 3.3. Has the site been identified in a watershed or local plan as important for maintaining water quality? *Answer YES if there is a TMDL for the lake or basin in which the unit is found.*	Yes = 2 No = 0	
Total for L 3	Add the points in the boxes above	

Rating of Value If score is:___**2-4 = H** ___**1 = M** ___**0 = L** *Record the rating on the first page*

Wetland name or number ____

LAKE FRINGE WETLANDS **Hydrologic Functions** - Indicators that the wetland unit functions to reduce shoreline erosion	
L 4.0. Does the site have the potential to reduce shoreline erosion?	
L 4.1. Distance along shore and average width of Cowardin classes along the lakeshore (**do not** include Aquatic bed): *Choose the highest scoring description that matches conditions in the wetland.* > ¾ of distance is Scrub-shrub or Forested at least 33 ft (10 m) wide — points = 6 > ¾ of distance is Scrub-shrub or Forested at least 6 ft (2 m) wide — points = 4 > ¼ distance is Scrub-shrub or Forested at least 33 ft (10 m) wide — points = 4 Plants are at least 6 ft (2 m) wide (any type except Aquatic bed) — points = 2 Plants are less than 6 ft (2 m) wide (any type except Aquatic bed) — points = 0	

Rating of Site Potential: If score is:___**6 = M** ___**0-5 = L** *Record the rating on the first page*

L 5.0. Does the landscape have the potential to support the hydrologic functions of the site?		
L 5.1. Is the lake used by power boats with more than 10 hp?	Yes = 1 No = 0	
L 5.2. Is the fetch on the lake side of the unit at least 1 mile in distance?	Yes = 1 No = 0	
Total for L 5	Add the points in the boxes above	

Rating of Landscape Potential If score is:___**2 = H** ___**1 = M** ___**0 = L** *Record the rating on the first page*

L 6.0. Are the hydrologic functions provided by the site valuable to society?	
L 6.1. Are there resources along the shore that can be impacted by erosion? If more than one resource is present, choose the one with the highest score. There are human structures or old growth/mature forests within 25 ft of OHWM of the shore in the unit — points = 2 There are nature trails or other paths and recreational activities within 25 ft of OHWM — points = 1 Other resources that could be impacted by erosion — points = 1 There are no resources that can be impacted by erosion along the shores of the unit — points = 0	

Rating of Value: If score is:___**2 = H** ___**1 = M** ___**0 = L** *Record the rating on the first page*

NOTES and FIELD OBSERVATIONS:

1775

Wetland name or number E

SLOPE WETLANDS

Water Quality Functions - Indicators that the site functions to improve water quality

S 1.0. Does the site have the potential to improve water quality?	
S 1.1. Characteristics of the average slope of the wetland: *(o 1% slope hos a 1 ft verticol drop in elevotion for every 100 ft of horizontol distance)* Slope is 1% or less — points = 3 Slope is > 1%-2% — points = 2 Slope is > 2%-5% — points = 1 Slope is greater than 5% — points = 0	3
S 1.2. The soil 2 in below the surface (or duff layer) is true clay or true organic *(use NRCS definitions)*: Yes = 3 No = 0	Ø
S 1.3. Characteristics of the plants in the wetland that trap sediments and pollutants: Choose the points appropriate for the description that best fits the plants in the wetland. *Dense means you have trouble seeing the soil surface (>75% cover), ond uncut means not grazed or mowed and plants are higher thon 6 in.* Dense, uncut, herbaceous plants > 90% of the wetland area — points = 6 Dense, uncut, herbaceous plants > ½ of area — points = 3 Dense, woody, plants > ½ of area — points = 2 Dense, uncut, herbaceous plants > ¼ of area — points = 1 Does not meet any of the criteria above for plants — points = 0	6 3
Total for S 1 — Add the points in the boxes above	9

Rating of Site Potential If score is: ___12 = H ✓6-11 = M ___0-5 = L *Record the rating on the first poge*

S 2.0. Does the landscape have the potential to support the water quality function of the site?	
S 2.1. Is > 10% of the area within 150 ft on the uphill side of the wetland in land uses that generate pollutants? Yes = 1 No = 0	1
S 2.2. Are there other sources of pollutants coming into the wetland that are not listed in question S 2.1? Other sources _____ Yes = 1 No = 0	1
Total for S 2 — Add the points in the boxes above	2

Rating of Landscape Potential If score is: ✓1-2 = M ___0 = L *Record the rating on the first poge*

S 3.0. Is the water quality improvement provided by the site valuable to society?	
S 3.1. Does the wetland discharge directly (i.e., within 1 mi) to a stream, river, lake, or marine water that is on the 303(d) list? Yes = 1 No = 0	1
S 3.2. Is the wetland in a basin or sub-basin where water quality is an issue? *At least one aquatic resource in the bosin is on the 303(d) list.* Yes = 1 No = 0	1
S 3.3. Has the site been identified in a watershed or local plan as important for maintaining water quality? *Answer YES if there is o TMDL for the bosin in which unit is found.* Yes = 2 No = 0	2
Total for S 3 — Add the points in the boxes above	4

Rating of Value If score is: ✓2-4 = H ___1 = M ___0 = L *Record the roting on the first page*

Wetland name or number _____

SLOPE WETLANDS

Hydrologic Functions - Indicators that the site functions to reduce flooding and stream erosion

S 4.0. Does the site have the potential to reduce flooding and stream erosion?	
S 4.1. Characteristics of plants that reduce the velocity of surface flows during storms: Choose the points appropriate for the description that best fits conditions in the wetland. *Stems of plants should be thick enough (usually > $^{1}/_{8}$ in), or dense enough, to remain erect during surface flows.* Dense, uncut, **rigid** plants cover > 90% of the area of the wetland points = 1 All other conditions points = 0	1

Rating of Site Potential If score is: ✓ **1 = M** ___ **0 = L** *Record the rating on the first page*

S 5.0. Does the landscape have the potential to support the hydrologic functions of the site?	
S 5.1. Is more than 25% of the area within 150 ft upslope of wetland in land uses or cover that generate excess surface runoff? Yes = 1 No = 0	1

Rating of Landscape Potential If score is: ✓ **1 = M** ___ **0 = L** *Record the rating on the first page*

S 6.0. Are the hydrologic functions provided by the site valuable to society?	
S 6.1. Distance to the nearest areas downstream that have flooding problems: The sub-basin immediately down-gradient of site has flooding problems that result in damage to human or natural resources (e.g., houses or salmon redds) points = 2 Surface flooding problems are in a sub-basin farther down-gradient points = 1 No flooding problems anywhere downstream points = 0	2
S 6.2. Has the site been identified as important for flood storage or flood conveyance in a regional flood control plan? Yes = 2 No = 0	Ø
Total for S 6 Add the points in the boxes above	2

Rating of Value If score is ✓ **2-4 = H** ___ **1 = M** ___ **0 = L** *Record the rating on the first page*

NOTES and FIELD OBSERVATIONS:

1775

Wetland name or number B

These questions apply to wetlands of all HGM classes.

HABITAT FUNCTIONS - Indicators that site functions to provide important habitat

H 1.0. Does the site have the potential to provide habitat?

H 1.1. Structure of plant community: *Indicators ore Cowardin closses and strata within the Forested class.* Check the Cowardin plant classes in the wetland. *Up to 10 patches may be combined for each closs to meet the threshold of ¼ ac or more thon 10% of the unit if it is smoller than 2.5 oc. Add the number of structures checked.*

___Aquatic bed	4 structures or more: points = 4
✓ Emergent	3 structures: points = 2
___Scrub-shrub (areas where shrubs have > 30% cover)	2 structures: points = 1
✓ Forested (areas where trees have > 30% cover)	1 structure: points = 0

If the unit hos o Forested class, check if:

✓ The Forested class has 3 out of 5 strata (canopy, sub-canopy, shrubs, herbaceous, moss/ground-cover) that each cover 20% within the Forested polygon

2

H 1.2. Hydroperiods

Check the types of water regimes (hydroperiods) present within the wetland. The water regime has to cover more than 10% of the wetland or ¼ ac to count (*see text for descriptions of hydroperiods*).

___Permanently flooded or inundated	4 or more types present: points = 3
✓ Seasonally flooded or inundated	3 types present: points = 2
___Occasionally flooded or inundated	2 types present: points = 1
✓ Saturated only	1 type present: points = 0
✓ Permanently flowing stream or river in, or adjacent to, the wetland	
___Seasonally flowing stream in, or adjacent to, the wetland	
✓ **Lake Fringe wetland**	**2 points**
___**Freshwater tidal wetland**	**2 points**

3

H 1.3. Richness of plant species

Count the number of plant species in the wetland that cover at least 10 ft^2.

Different patches of the some species con be combined to meet the size threshold ond you do not have to name the species. ***Da nat include Eurasian milfail, reed canarygrass, purple laasestrife, Canadian thistle***

If you counted: > 19 species	points = 2
5 - 19 species	points = 1
< 5 species	points = 0

1

H 1.4. Interspersion of habitats

Decide from the diagrams below whether interspersion among Cowardin plants classes (described in H 1.1), or the classes and unvegetated areas (can include open water or mudflats) is high, moderate, low, or none. *If you hove four or more plant closses or three closses and open water, the rating is olways high.*

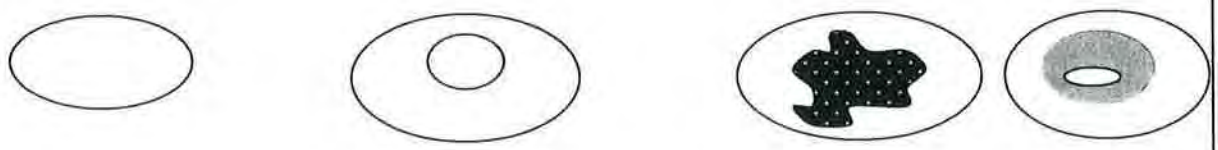

None = 0 points **Low** = 1 point **Moderate** = 2 points

All three diagrams in this row are **HIGH** = 3points

2

Wetland name or number _____ 8

H 1.5. Special habitat features: Check the habitat features that are present in the wetland. *The number of checks is the number of points.* ✓ Large, downed, woody debris within the wetland (> 4 in diameter and 6 ft long). ____Standing snags (dbh > 4 in) within the wetland ____Undercut banks are present for at least 6.6 ft (2 m) **and/or** overhanging plants extends at least 3.3 ft (1 m) over a stream (or ditch) in, or contiguous with the wetland, for at least 33 ft (10 m) ✓ Stable steep banks of fine material that might be used by beaver or muskrat for denning (> 30 degree slope) OR signs of recent beaver activity are present *(cut shrubs or trees that have not yet weathered where wood is exposed)* ✓ At least ¼ ac of thin-stemmed persistent plants or woody branches are present in areas that are permanently or seasonally inundated *(structures for egg-laying by amphibians)* ____Invasive plants cover less than 25% of the wetland area in every stratum of plants (*see H 1.1 for list of strata*)	3
Total for H 1 — Add the points in the boxes above	11

Rating of Site Potential If score is:___**15-18 = H** ✓ **7-14 = M** ___**0-6 = L** *Record the rating on the first page*

H 2.0. Does the landscape have the potential to support the habitat functions of the site?	
H 2.1. Accessible habitat (include *only habitat that directly abuts wetland unit*). *Calculate:* % undisturbed habitat___ + [(% moderate and low intensity land uses)/2]___ = _____% If total accessible habitat is: > $^1/_3$ (33.3%) of 1 km Polygon — points = 3 20-33% of 1 km Polygon — points = 2 10-19% of 1 km Polygon — points = 1 < 10% of 1 km Polygon — points = 0	~~2~~ 1
H 2.2. Undisturbed habitat in 1 km Polygon around the wetland. *Calculate:* % undisturbed habitat___ + [(% moderate and low intensity land uses)/2]___ = _____% Undisturbed habitat > 50% of Polygon — points = 3 Undisturbed habitat 10-50% and in 1-3 patches — points = 2 Undisturbed habitat 10-50% and > 3 patches — points = 1 Undisturbed habitat < 10% of 1 km Polygon — points = 0	1
H 2.3. Land use intensity in 1 km Polygon: If > 50% of 1 km Polygon is high intensity land use — points = (- 2) ≤ 50% of 1 km Polygon is high intensity — points = 0	-2
Total for H 2 — Add the points in the boxes above	Ø

Rating of Landscape Potential If score is:___**4-6 = H** ___**1-3 = M** ✓ **< 1 = L** *Record the rating on the first page*

H 3.0. Is the habitat provided by the site valuable to society?	
H 3.1. Does the site provide habitat for species valued in laws, regulations, or policies? *Choose only the highest score that applies to the wetland being rated.* Site meets ANY of the following criteria: — points = 2 ✓ It has 3 or more priority habitats within 100 m (see next page) — It provides habitat for Threatened or Endangered species (any plant or animal on the state or federal lists) — It is mapped as a location for an individual WDFW priority species — It is a Wetland of High Conservation Value as determined by the Department of Natural Resources — It has been categorized as an important habitat site in a local or regional comprehensive plan, in a Shoreline Master Plan, or in a watershed plan Site has 1 or 2 priority habitats (listed on next page) within 100 m — points = 1 Site does not meet any of the criteria above — points = 0	2

Rating of Value If score is:___**2 = H** ___**1 = M** ___**0 = L** *Record the rating on the first page*

Wetland name or number E

WDFW Priority Habitats

Priority habitats listed by WDFW (see complete descriptions of WDFW priority habitats, and the counties in which they can be found, in: Washington Department of Fish and Wildlife. 2008. Priority Habitat and Species List. Olympia, Washington. 177 pp. http://wdfw.wa.gov/publications/00165/wdfw00165.pdf or access the list from here: http://wdfw.wa.gov/conservation/phs/list/)

Count how many of the following priority habitats are within 330 ft (100 m) of the wetland unit: ***NOTE:*** *This question is independent of the land use between the wetland unit and the priority habitat.*

— **Aspen Stands:** Pure or mixed stands of aspen greater than 1 ac (0.4 ha).

— **Biodiversity Areas and Corridors**: Areas of habitat that are relatively important to various species of native fish and wildlife (*full descriptions in WDFW PHS report*).

— **Herbaceous Balds:** Variable size patches of grass and forbs on shallow soils over bedrock.

— **Old-growth/Mature forests:** Old-growth west of Cascade crest – Stands of at least 2 tree species, forming a multi-layered canopy with occasional small openings; with at least 8 trees/ac (20 trees/ha) > 32 in (81 cm) dbh or > 200 years of age. Mature forests – Stands with average diameters exceeding 21 in (53 cm) dbh; crown cover may be less than 100%; decay, decadence, numbers of snags, and quantity of large downed material is generally less than that found in old-growth; 80-200 years old west of the Cascade crest.

— **Oregon White Oak:** Woodland stands of pure oak or oak/conifer associations where canopy coverage of the oak component is important (*full descriptions in WDFW PHS report p. 158 – see web link above*).

— **Riparian**: The area adjacent to aquatic systems with flowing water that contains elements of both aquatic and terrestrial ecosystems which mutually influence each other.

— **Westside Prairies:** Herbaceous, non-forested plant communities that can either take the form of a dry prairie or a wet prairie (*full descriptions in WDFW PHS report p. 161 – see web link above*).

— **Instream:** The combination of physical, biological, and chemical processes and conditions that interact to provide functional life history requirements for instream fish and wildlife resources.

— **Nearshore**: Relatively undisturbed nearshore habitats. These include Coastal Nearshore, Open Coast Nearshore, and Puget Sound Nearshore. (*full descriptions of habitats and the definition of relatively undisturbed are in WDFW report – see web link on previous page).*

— **Caves:** A naturally occurring cavity, recess, void, or system of interconnected passages under the earth in soils, rock, ice, or other geological formations and is large enough to contain a human.

— **Cliffs:** Greater than 25 ft (7.6 m) high and occurring below 5000 ft elevation.

— **Talus:** Homogenous areas of rock rubble ranging in average size 0.5 - 6.5 ft (0.15 - 2.0 m), composed of basalt, andesite, and/or sedimentary rock, including riprap slides and mine tailings. May be associated with cliffs.

— **Snags and Logs:** Trees are considered snags if they are dead or dying and exhibit sufficient decay characteristics to enable cavity excavation/use by wildlife. Priority snags have a diameter at breast height of > 20 in (51 cm) in western Washington and are > 6.5 ft (2 m) in height. Priority logs are > 12 in (30 cm) in diameter at the largest end, and > 20 ft (6 m) long.

Note: All vegetated wetlands are by definition a priority habitat but are not included in this list because they are addressed elsewhere.

Wetland name or number ____

CATEGORIZATION BASED ON SPECIAL CHARACTERISTICS

Wetland Type *Check off any criteria that apply to the wetland. Circle the category when the appropriate criteria are met.*	**Category**
SC 1.0. Estuarine wetlands Does the wetland meet the following criteria for Estuarine wetlands? — The dominant water regime is tidal, — Vegetated, and — With a salinity greater than 0.5 ppt Yes –Go to **SC 1.1** No= **Not an estuarine wetland**	
SC 1.1. Is the wetland within a National Wildlife Refuge, National Park, National Estuary Reserve, Natural Area Preserve, State Park or Educational, Environmental, or Scientific Reserve designated under WAC 332-30-151? Yes = **Category I** No - Go to **SC 1.2**	**Cat. I**
SC 1.2. Is the wetland unit at least 1 ac in size and meets at least two of the following three conditions? — The wetland is relatively undisturbed (has no diking, ditching, filling, cultivation, grazing, and has less than 10% cover of non-native plant species. (If non-native species are *Spartina*, see page 25) — At least ¾ of the landward edge of the wetland has a 100 ft buffer of shrub, forest, or un-grazed or un-mowed grassland. — The wetland has at least two of the following features: tidal channels, depressions with open water, or contiguous freshwater wetlands. Yes = **Category I** No = **Category II**	**Cat. I** **Cat. II**
SC 2.0. Wetlands of High Conservation Value (WHCV) SC 2.1. Has the WA Department of Natural Resources updated their website to include the list of Wetlands of High Conservation Value? Yes – Go to **SC 2.2** No – Go to **SC 2.3** SC 2.2. Is the wetland listed on the WDNR database as a Wetland of High Conservation Value? Yes = **Category I** No = **Not a WHCV** SC 2.3. Is the wetland in a Section/Township/Range that contains a Natural Heritage wetland? http://www1.dnr.wa.gov/nhp/refdesk/datasearch/wnhpwetlands.pdf Yes – **Contact WNHP/WDNR and go to SC 2.4** No = **Not a WHCV** SC 2.4. Has WDNR identified the wetland within the S/T/R as a Wetland of High Conservation Value and listed it on their website? Yes = **Category I** No = **Not a WHCV**	**Cat. I**
SC 3.0. Bogs Does the wetland (or any part of the unit) meet both the criteria for soils and vegetation in bogs? *Use the key below.* ***If you answer YES you will still need to rate the wetland based on its functions.*** SC 3.1. Does an area within the wetland unit have organic soil horizons, either peats or mucks, that compose 16 in or more of the first 32 in of the soil profile? Yes – Go to **SC 3.3** No – Go to **SC 3.2** SC 3.2. Does an area within the wetland unit have organic soils, either peats or mucks, that are less than 16 in deep over bedrock, or an impermeable hardpan such as clay or volcanic ash, or that are floating on top of a lake or pond? Yes – Go to **SC 3.3** No = **Is not a bog** SC 3.3. Does an area with peats or mucks have more than 70% cover of mosses at ground level, AND at least a 30% cover of plant species listed in Table 4? Yes = **is a Category i bog** No – Go to **SC 3.4** **NOTE:** If you are uncertain about the extent of mosses in the understory, you may substitute that criterion by measuring the pH of the water that seeps into a hole dug at least 16 in deep. If the pH is less than 5.0 and the plant species in Table 4 are present, the wetland is a bog. SC 3.4. Is an area with peats or mucks forested (> 30% cover) with Sitka spruce, subalpine fir, western red cedar, western hemlock, lodgepole pine, quaking aspen, Engelmann spruce, or western white pine, AND any of the species (or combination of species) listed in Table 4 provide more than 30% of the cover under the canopy? Yes = **Is a Category I bog** No = **Is not a bog**	**Cat. I**

Wetland name or number E

SC 4.0. Forested Wetlands Does the wetland have at least 1 contiguous acre of forest that meets one of these criteria for the WA Department of Fish and Wildlife's forests as priority habitats? ***If you answer YES you will still need to rate the wetland based on its functions.*** — **Old-growth forests** (west of Cascade crest): Stands of at least two tree species, forming a multi-layered canopy with occasional small openings; with at least 8 trees/ac (20 trees/ha) that are at least 200 years of age OR have a diameter at breast height (dbh) of 32 in (81 cm) or more. — **Mature forests** (west of the Cascade Crest): Stands where the largest trees are 80- 200 years old OR the species that make up the canopy have an average diameter (dbh) exceeding 21 in (53 cm). Yes = **Category I** No = **Not a forested wetland for this section**	**Cat. I**
SC 5.0. Wetlands in Coastal Lagoons Does the wetland meet all of the following criteria of a wetland in a coastal lagoon? — The wetland lies in a depression adjacent to marine waters that is wholly or partially separated from marine waters by sandbanks, gravel banks, shingle, or, less frequently, rocks — The lagoon in which the wetland is located contains ponded water that is saline or brackish (> 0.5 ppt) during most of the year in at least a portion of the lagoon *(needs to be measured near the bottom)* Yes – Go to **SC 5.1** No = **Not a wetland in a coastal lagoon**	**Cat. I**
SC 5.1. Does the wetland meet all of the following three conditions? — The wetland is relatively undisturbed (has no diking, ditching, filling, cultivation, grazing), and has less than 20% cover of aggressive, opportunistic plant species (see list of species on p. 100). — At least ¾ of the landward edge of the wetland has a 100 ft buffer of shrub, forest, or un-grazed or un-mowed grassland. — The wetland is larger than $^{1}/_{10}$ ac (4350 ft^2) Yes = **Category I** No = **Category II**	**Cat. II**
SC 6.0. Interdunal Wetlands Is the wetland west of the 1889 line (also called the Western Boundary of Upland Ownership or WBUO)? ***If you answer yes you will still need to rate the wetland based on its habitat functions.*** In practical terms that means the following geographic areas: — Long Beach Peninsula: Lands west of SR 103 — Grayland-Westport: Lands west of SR 105 — Ocean Shores-Copalis: Lands west of SR 115 and SR 109 Yes – Go to **SC 6.1** No = **not an interdunal wetland for rating**	**Cat I**
SC 6.1. Is the wetland 1 ac or larger and scores an 8 or 9 for the habitat functions on the form (rates H,H,H or H,H,M for the three aspects of function)? Yes = **Category I** No – Go to **SC 6.2**	**Cat. II**
SC 6.2. Is the wetland 1 ac or larger, or is it in a mosaic of wetlands that is 1 ac or larger? Yes = **Category II** No – Go to **SC 6.3**	**Cat. III**
SC 6.3. Is the unit between 0.1 and 1 ac, or is it in a mosaic of wetlands that is between 0.1 and 1 ac? Yes = **Category III** No = **Category IV**	**Cat. IV**
Category of wetland based on Special Characteristics If you answered No for all types, enter "Not Applicable" on Summary Form	

This page left blank intentionally

TAL-1775

Wetland name or number F

RATING SUMMARY – Western Washington

Name of wetland (or ID #): Wetland F Date of site visit: 10/8/18

Rated by J. Marriott Trained by Ecology? ✓ Yes ___ No Date of training 4/2015

HGM Class used for rating Riparian Wetland has multiple HGM classes? ___ Y ___ N

NOTE: Form is not complete without the figures requested *(figures can be combined).*
Source of base aerial photo/map _____

OVERALL WETLAND CATEGORY _____ (based on functions___ or special characteristics___)

1. Category of wetland based on FUNCTIONS

_____ **Category I** – Total score = 23 - 27

✓ **Category II** – Total score = 20 - 22

_____ **Category III** – Total score = 16 - 19

_____ **Category IV** – Total score = 9 - 15

100'

FUNCTION	Improving Water Quality	Hydrologic	Habitat	
		Circle the appropriate ratings		
Site Potential	H (M) L	H (M) L	H (M) L	
Landscape Potential	(H) M L	H (M) L	H M (L)	
Value	(H) M L	(H) M L	(H) M L	TOTAL
Score Based on Ratings	8	7	6	21

Score for each function based on three ratings *(order of ratings is not important)*

9 = H,H,H
8 = H,H,M
7 = H,H,L
7 = H,M,M
6 = H,M,L
6 = M,M,M
5 = H,L,L
5 = M,M,L
4 = M,L,L
3 = L,L,L

2. Category based on SPECIAL CHARACTERISTICS of wetland

CHARACTERISTIC	CATEGORY
Estuarine	I II
Wetland of High Conservation Value	I
Bog	I
Mature Forest	I
Old Growth Forest	I
Coastal Lagoon	I II
Interdunal	I II III IV
None of the above	

Wetland name or number _____

Maps and figures required to answer questions correctly for Western Washington

Depressional Wetlands

Map of:	To answer questions:	Figure #
Cowardin plant classes	D 1.3, H 1.1, H 1.4	
Hydroperiods	D 1.4, H 1.2	
Location of outlet (*can be added to map of hydroperiods)*	D 1.1, D 4.1	
Boundary of area within 150 ft of the wetland *(can be added to another figure)*	D 2.2, D 5.2	
Map of the contributing basin	D 4.3, D 5.3	
1 km Polygon: Area that extends 1 km from entire wetland edge - including polygons for accessible habitat and undisturbed habitat	H 2.1, H 2.2, H 2.3	
Screen capture of map of 303(d) listed waters in basin (from Ecology website)	D 3.1, D 3.2	
Screen capture of list of TMDLs for WRIA in which unit is found (from web)	D 3.3	

Riverine Wetlands

Map of:	To answer questions:	Figure #
Cowardin plant classes	H 1.1, H 1.4	
Hydroperiods	H 1.2	
Ponded depressions	R 1.1	
Boundary of area within 150 ft of the wetland *(can be added to another figure)*	R 2.4	
Plant cover of trees, shrubs, and herbaceous plants	R 1.2, R 4.2	
Width of unit vs. width of stream *(can be added to another figure)*	R 4.1	
Map of the contributing basin	R 2.2, R 2.3, R 5.2	
1 km Polygon: Area that extends 1 km from entire wetland edge - including polygons for accessible habitat and undisturbed habitat	H 2.1, H 2.2, H 2.3	
Screen capture of map of 303(d) listed waters in basin (from Ecology website)	R 3.1	
Screen capture of list of TMDLs for WRIA in which unit is found (from web)	R 3.2, R 3.3	

Lake Fringe Wetlands

Map of:	To answer questions:	Figure #
Cowardin plant classes	L 1.1, L 4.1, H 1.1, H 1.4	
Plant cover of trees, shrubs, and herbaceous plants	L 1.2	
Boundary of area within 150 ft of the wetland *(can be added to another figure)*	L 2.2	
1 km Polygon: Area that extends 1 km from entire wetland edge - including polygons for accessible habitat and undisturbed habitat	H 2.1, H 2.2, H 2.3	
Screen capture of map of 303(d) listed waters in basin (from Ecology website)	L 3.1, L 3.2	
Screen capture of list of TMDLs for WRIA in which unit is found (from web)	L 3.3	

Slope Wetlands

Map of:	To answer questions:	Figure #
Cowardin plant classes	H 1.1, H 1.4	
Hydroperiods	H 1.2	
Plant cover of **dense** trees, shrubs, and herbaceous plants	S 1.3	
Plant cover of **dense, rigid** trees, shrubs, and herbaceous plants *(can be added to figure above)*	S 4.1	
Boundary of 150 ft buffer (can be added to another figure)	S 2.1, S 5.1	
1 km Polygon: Area that extends 1 km from entire wetland edge - including polygons for accessible habitat and undisturbed habitat	H 2.1, H 2.2, H 2.3	
Screen capture of map of 303(d) listed waters in basin (from Ecology website)	S 3.1, S 3.2	
Screen capture of list of TMDLs for WRIA in which unit is found (from web)	S 3.3	

1775

Wetland name or number E

HGM Classification of Wetlands in Western Washington

For questions 1-7, the criteria described must apply to the entire unit being rated.

If the hydrologic criteria listed in each question do not apply to the entire unit being rated, you probably have a unit with multiple HGM classes. In this case, identify which hydrologic criteria in questions 1-7 apply, and go to Question 8.

1. Are the water levels in the entire unit usually controlled by tides except during floods?

   NO – go to 2 **YES** – the wetland class is **Tidal Fringe** – go to 1.1

   1.1 Is the salinity of the water during periods of annual low flow below 0.5 ppt (parts per thousand)?

   NO – Saltwater Tidal Fringe (Estuarine) **YES – Freshwater Tidal Fringe**
   *If your wetland can be classified as a Freshwater Tidal Fringe use the forms for **Riverine** wetlands. If it is Saltwater Tidal Fringe it is an **Estuarine** wetland and is not scored. This method **cannot** be used to score functions for estuarine wetlands.*

2. The entire wetland unit is flat and precipitation is the only source (>90%) of water to it. Groundwater and surface water runoff are NOT sources of water to the unit.

   NO – go to 3 **YES** – The wetland class is **Flats**
   *If your wetland can be classified as a Flats wetland, use the form for **Depressional** wetlands.*

3. Does the entire wetland unit **meet all** of the following criteria?
   ___The vegetated part of the wetland is on the shores of a body of permanent open water (without any plants on the surface at any time of the year) at least 20 ac (8 ha) in size;
   ___At least 30% of the open water area is deeper than 6.6 ft (2 m).

   NO – go to 4 **YES** – The wetland class is **Lake Fringe** (Lacustrine Fringe)

4. Does the entire wetland unit **meet all** of the following criteria?
   ___The wetland is on a slope (*slope can be very gradual*),
   ___The water flows through the wetland in one direction (unidirectional) and usually comes from seeps. It may flow subsurface, as sheetflow, or in a swale without distinct banks,
   ___The water leaves the wetland **without being impounded**.

   NO – go to 5 **YES** – The wetland class is **Slope**

   NOTE: Surface water does not pond in these type of wetlands except occasionally in very small and shallow depressions or behind hummocks (depressions are usually <3 ft diameter and less than 1 ft deep).

5. Does the entire wetland unit **meet all** of the following criteria?
   ___The unit is in a valley, or stream channel, where it gets inundated by overbank flooding from that stream or river,
   ___The overbank flooding occurs at least once every 2 years.

Wetland name or number _____

NO – go to 6 **YES** – The wetland class is **Riverine**

NOTE: The Riverine unit can contain depressions that are filled with water when the river is not flooding

6. Is the entire wetland unit in a topographic depression in which water ponds, or is saturated to the surface, at some time during the year? *This means that any outlet, if present, is higher than the interior of the wetland.*

NO – go to 7 **YES** – The wetland class is **Depressional**

7. Is the entire wetland unit located in a very flat area with no obvious depression and no overbank flooding? The unit does not pond surface water more than a few inches. The unit seems to be maintained by high groundwater in the area. The wetland may be ditched, but has no obvious natural outlet.

NO – go to 8 **YES** – The wetland class is **Depressional**

8. Your wetland unit seems to be difficult to classify and probably contains several different HGM classes. For example, seeps at the base of a slope may grade into a riverine floodplain, or a small stream within a Depressional wetland has a zone of flooding along its sides. GO BACK AND IDENTIFY WHICH OF THE HYDROLOGIC REGIMES DESCRIBED IN QUESTIONS 1-7 APPLY TO DIFFERENT AREAS IN THE UNIT (make a rough sketch to help you decide). Use the following table to identify the appropriate class to use for the rating system if you have several HGM classes present within the wetland unit being scored.

NOTE: Use this table only if the class that is recommended in the second column represents 10% or more of the total area of the wetland unit being rated. If the area of the HGM class listed in column 2 is less than 10% of the unit; classify the wetland using the class that represents more than 90% of the total area.

HGM classes within the wetland unit being rated	HGM class to use in rating
Slope + Riverine	Riverine
Slope + Depressional	Depressional
Slope + Lake Fringe	Lake Fringe
Depressional + Riverine along stream within boundary of depression	Depressional
Depressional + Lake Fringe	Depressional
Riverine + Lake Fringe	Riverine
Salt Water Tidal Fringe and any other class of freshwater wetland	Treat as ESTUARINE

If you are still unable to determine which of the above criteria apply to your wetland, or if you have ***more than 2 HGM classes*** *within a wetland boundary, classify the wetland as Depressional for the rating.*

Wetland name or number F

DEPRESSIONAL AND FLATS WETLANDS

Water Quality Functions - Indicators that the site functions to improve water quality

D 1.0. Does the site have the potential to improve water quality?	
D 1.1. Characteristics of surface water outflows from the wetland: Wetland is a depression or flat depression (QUESTION 7 on key) with no surface water leaving it (no outlet). points = 3 Wetland has an intermittently flowing stream or ditch, OR highly constricted permanently flowing outlet. points = 2 Wetland has an unconstricted, or slightly constricted, surface outlet that is permanently flowing points = 1 Wetland is a flat depression (QUESTION 7 on key), whose outlet is a permanently flowing ditch. points = 1	
D 1.2. The soil 2 in below the surface (or duff layer) is true clay or true organic *(use NRCS definitions)*. Yes = 4 No = 0	
D 1.3. Characteristics and distribution of persistent plants (Emergent, Scrub-shrub, and/or Forested Cowardin classes): Wetland has persistent, ungrazed, plants > 95% of area points = 5 Wetland has persistent, ungrazed, plants > ½ of area points = 3 Wetland has persistent, ungrazed plants > $^{1}/_{10}$ of area points = 1 Wetland has persistent, ungrazed plants < $^{1}/_{10}$ of area points = 0	
D 1.4. Characteristics of seasonal ponding or inundation: *This is the area that is ponded for at least 2 months. See description in manual.* Area seasonally ponded is > ½ total area of wetland points = 4 Area seasonally ponded is > ¼ total area of wetland points = 2 Area seasonally ponded is < ¼ total area of wetland points = 0	
Total for D 1 Add the points in the boxes above	

Rating of Site Potential If score is:___**12-16 = H** ___**6-11 = M** ___**0-5 = L** *Record the rating on the first page*

D 2.0. Does the landscape have the potential to support the water quality function of the site?	
D 2.1. Does the wetland unit receive stormwater discharges? Yes = 1 No = 0	
D 2.2. Is > 10% of the area within 150 ft of the wetland in land uses that generate pollutants? Yes = 1 No = 0	
D 2.3. Are there septic systems within 250 ft of the wetland? Yes = 1 No = 0	
D 2.4. Are there other sources of pollutants coming into the wetland that are not listed in questions D 2.1-D 2.3? Source_____ Yes = 1 No = 0	
Total for D 2 Add the points in the boxes above	

Rating of Landscape Potential If score is:___**3 or 4 = H** ___**1 or 2 = M** ___**0 = L** *Record the rating on the first page*

D 3.0. Is the water quality improvement provided by the site valuable to society?	
D 3.1. Does the wetland discharge directly (i.e., within 1 mi) to a stream, river, lake, or marine water that is on the 303(d) list? Yes = 1 No = 0	
D 3.2. Is the wetland in a basin or sub-basin where an aquatic resource is on the 303(d) list? Yes = 1 No = 0	
D 3.3. Has the site been identified in a watershed or local plan as important for maintaining water quality (*answer YES if there is a TMDL for the basin in which the unit is found*)? Yes = 2 No = 0	
Total for D 3 Add the points in the boxes above	

Rating of Value If score is:___**2-4 = H** ___**1 = M** ___**0 = L** *Record the rating on the first page*

Wetland name or number _____

DEPRESSIONAL AND FLATS WETLANDS

Hydrologic Functions - Indicators that the site functions to reduce flooding and stream degradation

D 4.0. Does the site have the potential to reduce flooding and erosion?	
D 4.1. Characteristics of surface water outflows from the wetland: Wetland is a depression or flat depression with no surface water leaving it (no outlet) points = 4 Wetland has an intermittently flowing stream or ditch, OR highly constricted permanently flowing outlet points = 2 Wetland is a flat depression (QUESTION 7 on key), whose outlet is a permanently flowing ditch points = 1 Wetland has an unconstricted, or slightly constricted, surface outlet that is permanently flowing points = 0	
D 4.2. Depth of storage during wet periods: *Estimate the height of ponding above the bottom of the outlet. For wetlands with no outlet, measure from the surface of permanent water or if dry, the deepest part.* Marks of ponding are 3 ft or more above the surface or bottom of outlet points = 7 Marks of ponding between 2 ft to < 3 ft from surface or bottom of outlet points = 5 Marks are at least 0.5 ft to < 2 ft from surface or bottom of outlet points = 3 The wetland is a "headwater" wetland points = 3 Wetland is flat but has small depressions on the surface that trap water points = 1 Marks of ponding less than 0.5 ft (6 in) points = 0	
D 4.3. Contribution of the wetland to storage in the watershed: *Estimate the ratio of the area of upstream basin contributing surface water to the wetland to the area of the wetland unit itself.* The area of the basin is less than 10 times the area of the unit points = 5 The area of the basin is 10 to 100 times the area of the unit points = 3 The area of the basin is more than 100 times the area of the unit points = 0 Entire wetland is in the Flats class points = 5	
Total for D 4 Add the points in the boxes above	

Rating of Site Potential If score is:___12-16 = H ___6-11 = M ___0-5 = L *Record the rating on the first page*

D 5.0. Does the landscape have the potential to support hydrologic functions of the site?	
D 5.1. Does the wetland receive stormwater discharges? Yes = 1 No = 0	
D 5.2. Is >10% of the area within 150 ft of the wetland in land uses that generate excess runoff? Yes = 1 No = 0	
D 5.3. Is more than 25% of the contributing basin of the wetland covered with intensive human land uses (residential at >1 residence/ac, urban, commercial, agriculture, etc.)? Yes = 1 No = 0	
Total for D 5 Add the points in the boxes above	

Rating of Landscape Potential If score is:___3 = H ___1 or 2 = M ___0 = L *Record the rating on the first page*

D 6.0. Are the hydrologic functions provided by the site valuable to society?	
D 6.1. The unit is in a landscape that has flooding problems. *Choose the description that best matches conditions around the wetland unit being rated. Do not add points. Choose the highest score if more than one condition is met.* The wetland captures surface water that would otherwise flow down-gradient into areas where flooding has damaged human or natural resources (e.g., houses or salmon redds): • Flooding occurs in a sub-basin that is immediately down-gradient of unit. points = 2 • Surface flooding problems are in a sub-basin farther down-gradient. points = 1 Flooding from groundwater is an issue in the sub-basin. points = 1 The existing or potential outflow from the wetland is so constrained by human or natural conditions that the water stored by the wetland cannot reach areas that flood. *Explain why* _____ points = 0 There are no problems with flooding downstream of the wetland. points = 0	
D 6.2. Has the site been identified as important for flood storage or flood conveyance in a regional flood control plan? Yes = 2 No = 0	
Total for D 6 Add the points in the boxes above	

Rating of Value If score is:___2-4 = H ___1 = M ___0 = L *Record the rating on the first page*

1775

Wetland name or number F

RIVERINE AND FRESHWATER TIDAL FRINGE WETLANDS

Water Quality Functions - Indicators that the site functions to improve water quality

R 1.0. Does the site have the potential to improve water quality?	
R 1.1. Area of surface depressions within the Riverine wetland that can trap sediments during a flooding event: Depressions cover > $^3/_4$ area of wetland points = 8 Depressions cover > ½ area of wetland points = 4 Depressions present but cover < ½ area of wetland points = 2 No depressions present points = 0	2
R 1.2. Structure of plants in the wetland (areas with >90% cover at person height, **not** Cowardin classes) Trees or shrubs > $^2/_3$ area of the wetland points = 8 Trees or shrubs > $^1/_3$ area of the wetland points = 6 Herbaceous plants (> 6 in high) > $^2/_3$ area of the wetland points = 6 Herbaceous plants (> 6 in high) > $^1/_3$ area of the wetland points = 3 Trees, shrubs, and ungrazed herbaceous < $^1/_3$ area of the wetland points = 0	6
Total for R 1 Add the points in the boxes above	8

Rating of Site Potential If score is: ___12-16 = H ✓6-11 = M ___0-5 = L *Record the rating on the first page*

R 2.0. Does the landscape have the potential to support the water quality function of the site?	
R 2.1. Is the wetland within an incorporated city or within its UGA? Yes = 2 No = 0	2
R 2.2. Does the contributing basin to the wetland include a UGA or incorporated area? Yes = 1 No = 0	1
R 2.3. Does at least 10% of the contributing basin contain tilled fields, pastures, or forests that have been clearcut within the last 5 years? Yes = 1 No = 0	∅
R 2.4. Is > 10% of the area within 150 ft of the wetland in land uses that generate pollutants? Yes = 1 No = 0	1
R 2.5. Are there other sources of pollutants coming into the wetland that are not listed in questions R 2.1-R 2.4 Other sources _____ Yes = 1 No = 0	1
Total for R 2 Add the points in the boxes above	5

Rating of Landscape Potential If score is: ✓3-6 = H ___1 or 2 = M ___0 = L *Record the rating on the first page*

R 3.0. Is the water quality improvement provided by the site valuable to society?	
R 3.1. Is the wetland along a stream or river that is on the 303(d) list or on a tributary that drains to one within 1 mi? Yes = 1 No = 0	1
R 3.2. Is the wetland along a stream or river that has TMDL limits for nutrients, toxics, or pathogens? Yes = 1 No = 0	1
R 3.3. Has the site been identified in a watershed or local plan as important for maintaining water quality? (*answer YES if there is a TMDL for the drainage in which the unit is found*) Yes = 2 No = 0	2
Total for R 3 Add the points in the boxes above	4

Rating of Value If score is: ✓2-4 = H ___1 = M ___0 = L *Record the rating on the first page*

Wetland name or number _____

RIVERINE AND FRESHWATER TIDAL FRINGE WETLANDS

Hydrologic Functions - Indicators that site functions to reduce flooding and stream erosion

R 4.0. Does the site have the potential to reduce flooding and erosion?	
R 4.1. Characteristics of the overbank storage the wetland provides: *Estimate the average width of the wetland perpendicular to the direction of the flow and the width of the stream or river channel (distance between banks). Calculate the ratio: (average width of wetland)/(average width of stream between banks).* If the ratio is more than 20 — points = 9 If the ratio is 10-20 — points = 6 If the ratio is 5-<10 — points = 4 If the ratio is 1-<5 — points = 2 If the ratio is < 1 — points = 1	2
R 4.2. Characteristics of plants that slow down water velocities during floods: *Treat large woody debris as forest or shrub. Choose the points appropriate for the best description (polygons need to have >90% cover at person height. These are NOT Cowardin classes).* Forest or shrub for > $^1/_3$ area OR emergent plants > $^2/_3$ area — points = 7 Forest or shrub for > $^1/_{10}$ area OR emergent plants > $^1/_3$ area — points = 4 Plants do not meet above criteria — points = 0	7
Total for R 4 — Add the points in the boxes above	9

Rating of Site Potential If score is:___12-16 = H ✓6-11 = M ___0-5 = L *Record the rating on the first page*

R 5.0. Does the landscape have the potential to support the hydrologic functions of the site?	
R 5.1. Is the stream or river adjacent to the wetland downcut? — Yes = 0 No = 1	Ø
R 5.2. Does the up-gradient watershed include a UGA or incorporated area? — Yes = 1 No = 0	1
R 5.3. Is the up-gradient stream or river controlled by dams? — Yes = 0 No = 1	1
Total for R 5 — Add the points in the boxes above	2

Rating of Landscape Potential If score is:___3 = H ✓1 or 2 = M ___0 = L *Record the rating on the first page*

R 6.0. Are the hydrologic functions provided by the site valuable to society?	
R 6.1. Distance to the nearest areas downstream that have flooding problems? *Choose the description that best fits the site.* The sub-basin immediately down-gradient of the wetland has flooding problems that result in damage to human or natural resources (e.g., houses or salmon redds) — points = 2 Surface flooding problems are in a sub-basin farther down-gradient — points = 1 No flooding problems anywhere downstream — points = 0	2
R 6.2. Has the site been identified as important for flood storage or flood conveyance in a regional flood control plan? Yes = 2 No = 0	Ø
Total for R 6 — Add the points in the boxes above	2

Rating of Value If score is: ✓2-4 = H ___1 = M ___0 = L *Record the rating on the first page*

Wetland name or number F

LAKE FRINGE WETLANDS Water Quality Functions - Indicators that the site functions to improve water quality	
L 1.0. Does the site have the potential to improve water quality?	
L 1.1. Average width of plants along the lakeshore *(use polygons of Cowardin classes)*: Plants are more than 33 ft (10 m) wide — points = 6 Plants are more than 16 ft (5 m) wide and <33 ft — points = 3 Plants are more than 6 ft (2 m) wide and <16 ft — points = 1 Plants are less than 6 ft wide — points = 0	
L 1.2. Characteristics of the plants in the wetland: Choose the appropriate description that results in the highest points, and do not include any open water in your estimate of coverage. The herbaceous plants can be either the dominant form or as an understory in a shrub or forest community. *These are not Cowardin classes. Area of cover is total cover in the unit, but it can be in patches. Herbaceous does not include aquatic bed.* Cover of herbaceous plants is >90% of the vegetated area — points = 6 Cover of herbaceous plants is >$^2/_3$ of the vegetated area — points = 4 Cover of herbaceous plants is >$^1/_3$ of the vegetated area — points = 3 Other plants that are not aquatic bed > $^2/_3$ unit — points = 3 Other plants that are not aquatic bed in > $^1/_3$ vegetated area — points = 1 Aquatic bed plants and open water cover > $^2/_3$ of the unit — points = 0	
Total for L 1 — Add the points in the boxes above	

Rating of Site Potential If score is:___**8-12 = H** ___**4-7 = M** ___**0-3 = L** *Record the rating on the first page*

L 2.0. Does the landscape have the potential to support the water quality function of the site?	
L 2.1. Is the lake used by power boats? Yes = 1 No = 0	
L 2.2. Is > 10% of the area within 150 ft of wetland unit on the upland side in land uses that generate pollutants? Yes = 1 No = 0	
L 2.3. Does the lake have problems with algal blooms or excessive plant growth such as milfoil? Yes = 1 No = 0	
Total for L 2 — Add the points in the boxes above	

Rating of Landscape Potential: If score is:___**2 or 3 = H** ___**1 = M** ___**0 = L** *Record the rating on the first page*

L 3.0. Is the water quality improvement provided by the site valuable to society?	
L 3.1. Is the lake on the 303(d) list of degraded aquatic resources? Yes = 1 No = 0	
L 3.2. Is the lake in a sub-basin where water quality is an issue (at least one aquatic resource in the basin is on the 303(d) list)? Yes = 1 No = 0	
L 3.3. Has the site been identified in a watershed or local plan as important for maintaining water quality? *Answer YES if there is a TMDL for the lake or basin in which the unit is found.* Yes = 2 No = 0	
Total for L 3 — Add the points in the boxes above	

Rating of Value If score is:___**2-4 = H** ___**1 = M** ___**0 = L** *Record the rating on the first page*

Wetland name or number _____

LAKE FRINGE WETLANDS Hydrologic Functions - Indicators that the wetland unit functions to reduce shoreline erosion	
L 4.0. Does the site have the potential to reduce shoreline erosion?	
L 4.1. Distance along shore and average width of Cowardin classes along the lakeshore (**do not** include Aquatic bed): *Choose the highest scoring description that matches conditions in the wetland.* > ¾ of distance is Scrub-shrub or Forested at least 33 ft (10 m) wide — points = 6 > ¾ of distance is Scrub-shrub or Forested at least 6 ft (2 m) wide — points = 4 > ¼ distance is Scrub-shrub or Forested at least 33 ft (10 m) wide — points = 4 Plants are at least 6 ft (2 m) wide (any type except Aquatic bed) — points = 2 Plants are less than 6 ft (2 m) wide (any type except Aquatic bed) — points = 0	

Rating of Site Potential: If score is:___6 = M ___0-5 = L *Record the rating on the first page*

L 5.0. Does the landscape have the potential to support the hydrologic functions of the site?		
L 5.1. Is the lake used by power boats with more than 10 hp?	Yes = 1 No = 0	
L 5.2. Is the fetch on the lake side of the unit at least 1 mile in distance?	Yes = 1 No = 0	
Total for L 5	Add the points in the boxes above	

Rating of Landscape Potential If score is:___2 = H ___1 = M ___0 = L *Record the rating on the first page*

L 6.0. Are the hydrologic functions provided by the site valuable to society?	
L 6.1. Are there resources along the shore that can be impacted by erosion? If more than one resource is present, choose the one with the highest score. There are human structures or old growth/mature forests within 25 ft of OHWM of the shore in the unit — points = 2 There are nature trails or other paths and recreational activities within 25 ft of OHWM — points = 1 Other resources that could be impacted by erosion — points = 1 There are no resources that can be impacted by erosion along the shores of the unit — points = 0	

Rating of Value: If score is:___2 = H ___1 = M ___0 = L *Record the rating on the first page*

NOTES and FIELD OBSERVATIONS:

1775

Wetland name or number F

SLOPE WETLANDS

Water Quality Functions - Indicators that the site functions to improve water quality

S 1.0. Does the site have the potential to improve water quality?	
S 1.1. Characteristics of the average slope of the wetland: *(a 1% slope has a 1 ft vertical drop in elevation for every 100 ft of horizontal distance)* Slope is 1% or less — points = 3 Slope is > 1%-2% — points = 2 Slope is > 2%-5% — points = 1 Slope is greater than 5% — points = 0	
S 1.2. The soil 2 in below the surface (or duff layer) is true clay or true organic *(use NRCS definitions)*: Yes = 3 No = 0	
S 1.3. Characteristics of the plants in the wetland that trap sediments and pollutants: Choose the points appropriate for the description that best fits the plants in the wetland. *Dense means you have trouble seeing the soil surface (>75% cover), and uncut means not grazed or mowed and plants are higher than 6 in.* Dense, uncut, herbaceous plants > 90% of the wetland area — points = 6 Dense, uncut, herbaceous plants > ½ of area — points = 3 Dense, woody, plants > ½ of area — points = 2 Dense, uncut, herbaceous plants > ¼ of area — points = 1 Does not meet any of the criteria above for plants — points = 0	
Total for S 1 — Add the points in the boxes above	

Rating of Site Potential If score is:___12 = H ___6-11 = M ___0-5 = L *Record the rating on the first page*

S 2.0. Does the landscape have the potential to support the water quality function of the site?	
S 2.1. Is > 10% of the area within 150 ft on the uphill side of the wetland in land uses that generate pollutants? Yes = 1 No = 0	
S 2.2. Are there other sources of pollutants coming into the wetland that are not listed in question S 2.1? Other sources _____ Yes = 1 No = 0	
Total for S 2 — Add the points in the boxes above	

Rating of Landscape Potential If score is:___1-2 = M ___0 = L *Record the rating on the first page*

S 3.0. Is the water quality improvement provided by the site valuable to society?	
S 3.1. Does the wetland discharge directly (i.e., within 1 mi) to a stream, river, lake, or marine water that is on the 303(d) list? Yes = 1 No = 0	
S 3.2. Is the wetland in a basin or sub-basin where water quality is an issue? *At least one aquatic resource in the basin is on the 303(d) list.* Yes = 1 No = 0	
S 3.3. Has the site been identified in a watershed or local plan as important for maintaining water quality? *Answer YES if there is a TMDL for the basin in which unit is found.* Yes = 2 No = 0	
Total for S 3 — Add the points in the boxes above	

Rating of Value If score is:___2-4 = H ___1 = M ___0 = L *Record the rating on the first page*

Wetland name or number _____

SLOPE WETLANDS

Hydrologic Functions - Indicators that the site functions to reduce flooding and stream erosion

S 4.0. Does the site have the potential to reduce flooding and stream erosion?	
S 4.1. Characteristics of plants that reduce the velocity of surface flows during storms: Choose the points appropriate for the description that best fits conditions in the wetland. *Stems of plants should be thick enough (usually > $^{1}/_{8}$ in), or dense enough, to remain erect during surface flows.* Dense, uncut, **rigid** plants cover > 90% of the area of the wetland points = 1 All other conditions points = 0	

Rating of Site Potential If score is:___**1 = M** ___**0 = L** *Record the rating on the first page*

S 5.0. Does the landscape have the potential to support the hydrologic functions of the site?	
S 5.1. Is more than 25% of the area within 150 ft upslope of wetland in land uses or cover that generate excess surface runoff? Yes = 1 No = 0	

Rating of Landscape Potential If score is:___**1 = M** ___**0 = L** *Record the rating on the first page*

S 6.0. Are the hydrologic functions provided by the site valuable to society?	
S 6.1. Distance to the nearest areas downstream that have flooding problems: The sub-basin immediately down-gradient of site has flooding problems that result in damage to human or natural resources (e.g., houses or salmon redds) points = 2 Surface flooding problems are in a sub-basin farther down-gradient points = 1 No flooding problems anywhere downstream points = 0	
S 6.2. Has the site been identified as important for flood storage or flood conveyance in a regional flood control plan? Yes = 2 No = 0	
Total for S 6 Add the points in the boxes above	

Rating of Value If score is:___**2-4 = H** ___**1 = M** ___**0 = L** *Record the rating on the first page*

NOTES and FIELD OBSERVATIONS:

1775

Wetland name or number F

These questions apply to wetlands of all HGM classes.

HABITAT FUNCTIONS - Indicators that site functions to provide important habitat

H 1.0. Does the site have the potential to provide habitat?

H 1.1. Structure of plant community: *Indicators are Cowardin classes and strata within the Forested class.* Check the Cowardin plant classes in the wetland. *Up to 10 patches may be combined for each class to meet the threshold of ¼ ac or more than 10% of the unit if it is smaller than 2.5 ac. Add the number of structures checked.*

____Aquatic bed — 4 structures or more: points = 4
✓ Emergent — 3 structures: points = 2
✓ Scrub-shrub (areas where shrubs have > 30% cover) — 2 structures: points = 1
____Forested (areas where trees have > 30% cover) — 1 structure: points = 0

If the unit has a Forested class, check if:

____The Forested class has 3 out of 5 strata (canopy, sub-canopy, shrubs, herbaceous, moss/ground-cover) that each cover 20% within the Forested polygon

1

H 1.2. Hydroperiods

Check the types of water regimes (hydroperiods) present within the wetland. The water regime has to cover more than 10% of the wetland or ¼ ac to count (*see text for descriptions of hydroperiods*).

____Permanently flooded or inundated — 4 or more types present: points = 3
✓ Seasonally flooded or inundated — 3 types present: points = 2
____Occasionally flooded or inundated — 2 types present: points = 1
✓ Saturated only — 1 type present: points = 0
✓ Permanently flowing stream or river in, or adjacent to, the wetland
____Seasonally flowing stream in, or adjacent to, the wetland
____**Lake Fringe wetland** — **2 points**
____**Freshwater tidal wetland** — **2 points**

2

H 1.3. Richness of plant species

Count the number of plant species in the wetland that cover at least 10 ft^2.

Different patches of the same species can be combined to meet the size threshold and you do not have to name the species. ***Do not include Eurasian milfoil, reed canarygrass, purple loosestrife, Canadian thistle***

If you counted: > 19 species — points = 2
5 - 19 species — points = 1
< 5 species — points = 0

1

H 1.4. Interspersion of habitats

Decide from the diagrams below whether interspersion among Cowardin plants classes (described in H 1.1), or the classes and unvegetated areas (can include open water or mudflats) is high, moderate, low, or none. *If you have four or more plant classes or three classes and open water, the rating is always high.*

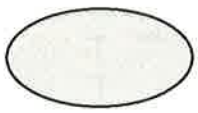

None = 0 points

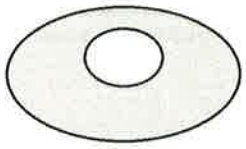

Low = 1 point

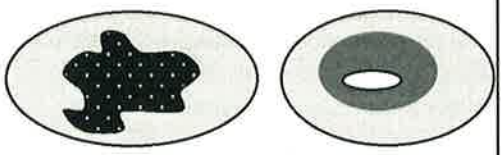

Moderate = 2 points

All three diagrams in this row are **HIGH** = 3points

2

Wetland name or number _____ 6

H 1.5. Special habitat features: Check the habitat features that are present in the wetland. *The number of checks is the number of points.* ✓ Large, downed, woody debris within the wetland (> 4 in diameter and 6 ft long). ____Standing snags (dbh > 4 in) within the wetland ____Undercut banks are present for at least 6.6 ft (2 m) **and/or** overhanging plants extends at least 3.3 ft (1 m) over a stream (or ditch) in, or contiguous with the wetland, for at least 33 ft (10 m) ✓ Stable steep banks of fine material that might be used by beaver or muskrat for denning (> 30 degree slope) OR signs of recent beaver activity are present *(cut shrubs or trees that have not yet weathered where wood is exposed)* ____At least ¼ ac of thin-stemmed persistent plants or woody branches are present in areas that are permanently or seasonally inundated *(structures for egg-laying by amphibians)* ____Invasive plants cover less than 25% of the wetland area in every stratum of plants (*see H 1.1 for list of strata*)	~~3~~ 2
Total for H 1 — Add the points in the boxes above	8

Rating of Site Potential If score is:___**15-18 = H** ✓**7-14 = M** ___**0-6 = L** *Record the rating on the first page*

H 2.0. Does the landscape have the potential to support the habitat functions of the site?	
H 2.1. Accessible habitat (include *only habitat that directly abuts wetland unit*). *Calculate:* % undisturbed habitat___ + [(% moderate and low intensity land uses)/2]___ = _____% If total accessible habitat is: > $^{1}/_{3}$ (33.3%) of 1 km Polygon — points = 3 20-33% of 1 km Polygon — points = 2 10-19% of 1 km Polygon — points = 1 < 10% of 1 km Polygon — points = 0	1
H 2.2. Undisturbed habitat in **1** km Polygon around the wetland. *Calculate:* % undisturbed habitat___ + [(% moderate and low intensity land uses)/2]___ = _____% Undisturbed habitat > 50% of Polygon — points = 3 Undisturbed habitat 10-50% and in 1-3 patches — points = 2 Undisturbed habitat 10-50% and > 3 patches — points = 1 Undisturbed habitat < 10% of 1 km Polygon — points = 0	1
H 2.3. Land use intensity in 1 km Polygon: If > 50% of 1 km Polygon is high intensity land use — points = (- 2) ≤ 50% of 1 km Polygon is high intensity — points = 0	-2
Total for H 2 — Add the points in the boxes above	0

Rating of Landscape Potential If score is:___**4-6 = H** ___**1-3 = M** ✓**< 1 = L** *Record the rating on the first page*

H 3.0. Is the habitat provided by the site valuable to society?	
H 3.1. Does the site provide habitat for species valued in laws, regulations, or policies? *Choose only the highest score that applies to the wetland being rated.* Site meets ANY of the following criteria: — points = 2 — It has 3 or more priority habitats within 100 m (see next page) — It provides habitat for Threatened or Endangered species (any plant or animal on the state or federal lists) — It is mapped as a location for an individual WDFW priority species — It is a Wetland of High Conservation Value as determined by the Department of Natural Resources — It has been categorized as an important habitat site in a local or regional comprehensive plan, in a Shoreline Master Plan, or in a watershed plan Site has 1 or 2 priority habitats (listed on next page) within 100 m — points = 1 Site does not meet any of the criteria above — points = 0	2

Rating of Value If score is: ✓**2 = H** ___**1 = M** ___**0 = L** *Record the rating on the first page*

1775

Wetland name or number F

WDFW Priority Habitats

Priority habitats listed by WDFW (see complete descriptions of WDFW priority habitats, and the counties in which they can be found, in: Washington Department of Fish and Wildlife. 2008. Priority Habitat and Species List. Olympia, Washington. 177 pp. http://wdfw.wa.gov/publications/00165/wdfw00165.pdf or access the list from here: http://wdfw.wa.gov/conservation/phs/list/)

Count how many of the following priority habitats are within 330 ft (100 m) of the wetland unit: ***NOTE:*** *This question is independent of the land use between the wetland unit and the priority habitat.*

— **Aspen Stands:** Pure or mixed stands of aspen greater than 1 ac (0.4 ha).

— **Biodiversity Areas and Corridors**: Areas of habitat that are relatively important to various species of native fish and wildlife (*full descriptions in WDFW PHS report*).

— **Herbaceous Balds:** Variable size patches of grass and forbs on shallow soils over bedrock.

— **Old-growth/Mature forests:** Old-growth west of Cascade crest – Stands of at least 2 tree species, forming a multi-layered canopy with occasional small openings; with at least 8 trees/ac (20 trees/ha) > 32 in (81 cm) dbh or > 200 years of age. Mature forests – Stands with average diameters exceeding 21 in (53 cm) dbh; crown cover may be less than 100%; decay, decadence, numbers of snags, and quantity of large downed material is generally less than that found in old-growth; 80-200 years old west of the Cascade crest.

— **Oregon White Oak:** Woodland stands of pure oak or oak/conifer associations where canopy coverage of the oak component is important (*full descriptions in WDFW PHS report p. 158 – see web link above*).

✓ **Riparian**: The area adjacent to aquatic systems with flowing water that contains elements of both aquatic and terrestrial ecosystems which mutually influence each other.

— **Westside Prairies:** Herbaceous, non-forested plant communities that can either take the form of a dry prairie or a wet prairie (*full descriptions in WDFW PHS report p. 161 – see web link above*).

✓ **Instream:** The combination of physical, biological, and chemical processes and conditions that interact to provide functional life history requirements for instream fish and wildlife resources.

— **Nearshore**: Relatively undisturbed nearshore habitats. These include Coastal Nearshore, Open Coast Nearshore, and Puget Sound Nearshore. (*full descriptions of habitats and the definition of relatively undisturbed are in WDFW report – see web link on previous page).*

— **Caves:** A naturally occurring cavity, recess, void, or system of interconnected passages under the earth in soils, rock, ice, or other geological formations and is large enough to contain a human.

— **Cliffs:** Greater than 25 ft (7.6 m) high and occurring below 5000 ft elevation.

— **Talus:** Homogenous areas of rock rubble ranging in average size 0.5 - 6.5 ft (0.15 - 2.0 m), composed of basalt, andesite, and/or sedimentary rock, including riprap slides and mine tailings. May be associated with cliffs.

✓ **Snags and Logs:** Trees are considered snags if they are dead or dying and exhibit sufficient decay characteristics to enable cavity excavation/use by wildlife. Priority snags have a diameter at breast height of > 20 in (51 cm) in western Washington and are > 6.5 ft (2 m) in height. Priority logs are > 12 in (30 cm) in diameter at the largest end, and > 20 ft (6 m) long.

Note: All vegetated wetlands are by definition a priority habitat but are not included in this list because they are addressed elsewhere.

APPENDIX C

ROWLEY DEVELOPMENT AGREEMENT – APPENDIX J

Copyright © 2021 Talasaea Consultants, Inc.

APPENDIX J – Critical Area Regulations

Section 1.0 Purpose
Section 2.0 Intent
Section 3.0 Environmentally Critical Areas
Section 4.0 Allowances
Section 5.0 Critical Area Intrusions
Section 6.0 Critical Area Studies
Section 7.0 Critical Area Protection Mechanisms, Buffer Areas and Building Setback Areas
Section 8.0 Temporary Marking – Permanent Marking – Signs
Section 9.0 Monitoring
Section 10.0 Critical Area Mitigation Fund
Section 11.0 Allowed Critical Area Activities
Section 12.0 Mitigation Plan Information Requirements
Section 13.0 Bonds for Restoration and Mitigation Activities
Section 14.0 Enforcement and Penalties for Critical Areas
Section 15.0 Civil Penalties
Section 16.0 Notices and Orders
Section 17.0 Criminal Penalties
Exhibit J-1 Critical Area Map
Exhibit J-2 Northern Enhancements
Exhibit J-3 Southern Enhancements
Exhibit J-4 Off-Site Enhancements
Exhibit J-5 Building Encroachment
Exhibit J-6 Interim 100' Line

1.0 Purpose

The purpose of this Appendix is to identify environmentally critical areas and to modify by agreement existing regulations in a manner which tailors their application and requires mitigation appropriate to this specific property, circumstance and unusual site conditions. In so doing, the parties intend to establish guidelines and regulations consistent with IMC 18.10.400.I but which allow for the consideration and implementation, upon a sufficient showing by the Master Developer, of alternative means of achieving like results.

The following buffer-related, specific current code provisions were utilized in the development of this Appendix:

- IMC 18.10.350 Intent.
- IMC 18.10.400.I Exemptions.
- IMC 18.10.640 Wetland buffer width requirements.
- IMC 18.10.650.A Exceptions to wetland buffer width requirements.

2.0 Intent

Any Critical Area regulations not specifically addressed in this Appendix are regulated by IMC 18.10. It is the intent of the City to balance the community vision which includes:

A. Environmental protection and preservation;

B. Diversified, economic growth which has been planned and which is compatible with the vision of the community; and,
C. Overall improvement of the quality of life for the residents of Issaquah.

3.0 Environmentally Critical Areas

A. All known, non-exempt critical areas located within the Project boundaries are identified on the Critical Area Map (**Exhibit J-1**). There are no Critical Areas located within the Rowley Center neighborhood aside from the adjacent wetlands associated with SR900, located on property owned by WSDOT. The Hyla Crossing neighborhood contains additional SR900 wetlands located within WSDOT right-of-way, steep slopes adjacent to Newport Way NW, floodplain associated with Tibbetts Creek, and Tibbetts Creek stream and wetlands.
B. No encroachments or disturbance shall occur within any Critical areas except for those listed in Sections 4.0 and 5.0 of this Appendix.

4.0 Allowances

The following activities are vested rights to the Master Developer with this Appendix and agreed to by the City to foster the redevelopment envisioned with this Agreement. These allowances require a City permit and must be accompanied by a Critical Area Study (unless otherwise noted) as provided for in Section 6.0 of this Appendix to ensure any impacts are minimized and mitigated.

A. Emergencies that threaten the public health, safety and welfare as determined by the Master Developer and/or Designated Official are exempt and shall not be subject to any review and approval process;
B. Non-vehicular Recreational Crossing(s) (up to 3) of Tibbetts Creek, provided there is no unmitigated wetland, stream or buffer impacts; and, added plantings, as directed by the Designated Official, shall be installed.
C. Public water, electric and natural gas distribution, public sewer collection (sanitary & storm), cable communications, telephone utility, and other private utilities and related activities, with no practical location alternative, undertaken pursuant to City-approved best management practices and restoration for any disturbance.
D. Relocation of Tibbetts Creek per **Exhibit J-4** to the west.
E. Trails and outlooks within the Critical Area buffer as part of an approved Trails Plan
F. Critical Area habitat enhancements (e.g. frog bridge, bird houses, bat boxes, etc.), shall not be subject to any review and approval process.
G. Sediment removal within Tibbetts Creek as necessary to maintain flows with restoration of any disturbed areas, as directed by the Designated Official.

5.0 Critical Areas Intrusions.

Should proposed development lead to critical area intrusions not addressed in Section 4.0, the applicant shall provide a Critical Area Study as provided for in Section 6.0 of this Appendix. The provisions of Section 2.0 of this Appendix must be supported in order to be considered for approval. An application for a critical area intrusion shall be approved where the Master Developer demonstrates that, as mitigated, approval of the intrusion is consistent with the policies set forth in Section 2.0.

6.0 Critical Areas Studies

A. Required: As determined by the Designated Official, an applicant for a development proposal that may, or could have probable adverse impacts to critical areas shall submit a critical areas study for all non-exempted critical area actions, to adequately evaluate the proposal and all probable impacts. The need for a critical areas study shall be determined through:
   1. Review of the SEPA decision for the Project;
   2. Agency resource maps or studies; or
   3. At the request of the Designated Official after field investigation.

B. Contents of Critical Areas Study: At a minimum a critical areas study shall be prepared at the applicant's expense, to identify and characterize any critical area as a part of the larger development proposal site; assess any hazards to the proposed development (e.g. flooding, steep slope instability, etc.); assess impacts of the development proposal on any critical areas located on or adjacent to the development proposal site; and assess the impacts of any alteration proposed for a critical area. Studies shall propose adequate mitigation, maintenance and monitoring plans and bonding measures. Critical areas studies shall include among other requirements, a scale map of the development proposal site and a written report. The following criteria identified within Subsection C are the basic requirements for a critical areas study. However, the Designated Official may request additional information if warranted by the specific request.

C. Required Notice: all Critical Area Studies shall be displayed on the City's webpage with other permit tracking information. Contents shall include:
   1. Vicinity Information:
      a. A description and maps at a scale no smaller than one (1) inch = fifty (50) feet (unless otherwise approved by the Designated Official), showing the entire parcel of land owned by the applicant; adjacent area; and the exact boundary of the critical area on the parcel as determined in compliance with appropriate section of this appendix. Maps can be overlaid on aerial photographs;
      b. For parcels containing wetlands, the study must include the location and description of the existing vegetative cover, including dominant species of the regulated wetland and adjacent area.
   2. Plan:
      a. A plan for the proposed activity at a scale no smaller than one (1) inch = twenty (20) feet (unless otherwise approved by the Designated Official), showing the location, width, depth and length of all existing and proposed structures, roads, sewage treatment, and installations to be located within the critical area and/or its buffer;
      b. The exact sizes and specifications for all regulated activities including the amounts and methods.
   3. Project Description:
      a. The purposes of the project and an explanation why the proposed activity cannot be located at another location on the project site, including an explanation of how the proposed activity is dependent upon the chosen specific location; and,
      b. Specific means to mitigate any potential adverse environmental impacts of the applicant's proposal.
   4. Additional Information:

The Designated Official may as appropriate require the following additional information to address a specific concern:

a. Topographic map, including elevations of the site and adjacent lands within the critical area and its buffer at contour intervals as specified by the Designated Official but in most cases no greater than five (5) feet;
b. Elevations and cross sections;
c. Assessment of critical area functional characteristics including but not limited to a discussion of the methodology used and documentation of the ecological, aesthetic, economic, or other values of the critical area;
d. A study of natural hazards at the site and the effect of any protective measures that might be taken to reduce such hazards;
e. A Biological Assessment as required by Section 7(c) of the Endangered Species Act; or,
f. Lighting impacts on adjacent wetland or stream critical areas; or,
g. Any other information deemed necessary to verify compliance with the provisions of this Appendix or to evaluate the proposed use in terms of the purposes of this Appendix.

D. The Designated Official shall circulate the critical areas study to any affected City Departments or other entities, as deemed appropriate, such as, the Public Works Department and the River and Streams Board.
E. The Designated Official shall make a final decision regarding the adequacy of the critical areas study.
F. No construction may occur prior to the issuance of a decision on the Critical Area Study and all necessary land use and/or utility permits.

7.0 Critical area protection mechanisms, buffer areas and building setback areas

All Critical Areas shall be protected pursuant to this Section 7.0.

A. Protection Mechanisms for Critical Areas
   1. There are two mechanisms for protecting critical areas: tracts and easements. The Designated Official will have the discretion to determine which mechanism shall be used to protect critical areas. In general the following can be used as guidance for using these mechanisms:
      a. Large critical areas will be placed in tracts.
      b. Smaller critical areas will be restricted by easements. These easements will permit the broader uses allowed in critical area tracts.
   2. Critical Area Tracts: Critical area tracts shall be used to protect critical areas in proposals for subdivisions or other development proposals to which they apply, and shall be recorded on all documents of title of record for all affected lots.
      a. Critical area tracts are legally created tracts containing critical areas and their buffers that shall remain undeveloped in perpetuity. Critical area tracts are an integral part of the larger parcel in which they are created, are dedicated or recorded at Final Plat or prior to Building Permit issuance and are not intended for future sale, lease or transfer. Permanent survey stakes using iron or cement markers as established by current survey standards shall be set delineating the boundaries between adjoining properties and the critical area tracts.

b. Ownership: Critical Area tracts shall not be individually owned, but shall be dedicated to the Master Association or other appropriate organization as approved by the Designated Official. In some circumstances, the City may consider ownership of the tracts, at their discretion.

c. Allowed Uses: Permitted uses in these tracts shall be consistent with this Appendix, and approved by the Designated Official.

3. Conservation Easements: Conservation Easements shall be used to protect critical areas on portions of private property containing critical areas where a critical area tract is not created. The easements shall be recorded on all documents of title of record for all affected parcels.

a. Conservation Easements are legally created restrictions containing critical areas and their buffers that shall remain undeveloped so long as the protection is needed. These easements are an integral part of the larger parcel in which they are created, are dedicated at Final Plat or prior to Building Permit issuance and are not intended for future sale, lease or transfer.

b. Ownership: Conservation easements shall be dedicated to the Master Association or other appropriate organizations as approved by the Designated Official. In some circumstances, the City may consider being the recipient of the easement, at their discretion.

c. Allowed Uses: Permitted uses in these easements shall be consistent with this Appendix, and approved by the Designated Official.

B Buffer Areas: Buffer areas shall be established from the outer edge of the critical area and based on the minimum buffer requirements set forth in the appropriate section of this Appendix.

1. Tibbetts Creek and associated wetlands – buffers will vary in width based on a Specific Critical Area Plan (generally illustrated as **Exhibit J-1**). The Plan will be developed recognizing the site is a combination of prior improvements and currently non-conforming creek and wetland buffers. The Plan will include the filling of a portion of the creek and wetlands and the creation of replacement creek and wetlands areas, buffer widenings and buffer enhancements. More specifically, the Plan will include the following:

a. Tibbetts Creek Greenway completed improvements (Wetlands C and D, approximately 2.5 acres) have provided benefits for creek capacity, water quality and fish and wildlife habitat for Tibbetts Creek in this geographic location.

b. On-site Enhancements

1. Southern Enhancements (**Exhibit J-3**): completed prior to occupancy of any redevelopment of parcels 7450900380, 7450900370 or 7450900360.
2. Southern Enhancements will establish a 100-foot buffer (averaged) and an additional 1.1 acres of critical area within the Creek.
3. Northern Enhancements (**Exhibit J-2**): completed prior to occupancy of 1,000,000 of Allowable Development within the Hyla Neighborhood
4. Northern Enhancements: will establish a 100-foot averaged buffer east of the Creek and add 0.6 acres of critical area at the northernmost end of the Project.

c. Off-site enhancements

1. Off-site Opportunity (**Exhibit J-4**, approximately 5 acres) – the Master Developer and the City shall work to obtain control over the off-site property to relocated Tibbetts Creek to the west either through obtaining fee title or a

conservation easement. The project will include filling a portion of the existing creek and wetlands combined with the creation of replacement creek and wetlands.

2. The Master Developer shall be responsible for land costs, developing the Creek enhancement and relocation plan per the Tibbetts Greenway Plan. Upon property control, the Master Developer may apply for and obtain all local and State permits necessary to implement such plan.
3. The City will, if necessary, assist in property acquisition.
4. Timing: Due to the uncertainty of Master Developer's ability to acquire title and/or otherwise obtain permission and/or permit approvals to conduct this off-site critical area work, Master Developer shall retain a portion of its developable property (as illustrated in Exhibit J-6) to be utilized as potential additional critical area buffer if the creek relocation as described in Subsection 2 above cannot be accomplished. This limitation is further described in Subsection 5 below.
5. Until such time as the off-site enhancements depicted in Exhibit J-4 are completed, Master Developer shall neither construct any new structures nor expand any existing structures within one hundred feet (100') of that portion of Tibbetts Creek (in its current location) adjacent to and between the southerly face of Building 15 (as depicted in Figure 3.2-1 of the Hyla Crossing and Rowley Center Project FEIS) to the northerly boundary of Master Developer's ownership adjacent to I-90. Nothing herein shall prohibit Master Developer from expanding any existing building where such expansion occurs outside of such 100 foot buffer.

d. Limited Building Encroachment (**Exhibit J-5**)

1. Maximum 2 locations
2. Location: vicinity of Maple and 19th Avenue
3. Maximum Encroachment: 200 linear feet, within 25 feet (10 foot buffer and 15 foot Building Setback Area) of Tibbetts Creek with a minimum vertical clearance of 12 feet (2nd Story and above)
4. Limitation: Mid-Rise or High-Rise Structure only
5. Required: Critical Area Study and necessary buffer mitigation including buffer replacement.

e. Building Setback Area

Unless otherwise allowed in this Section 7.B or 7.C, a 15-foot Building Setback Area shall apply.

2. I-90 and SR900 wetlands – would be maintained per existing conditions, unless wetlands are relocated through future actions.
3. Steep Slopes – toe and top of slopes shall be determined through a geo-technical evaluation with City peer review.
4. Restrictions due to the presence of Seismic hazards will be evaluated at Utility and Building Permit review.
5. Where more than one critical area buffers overlap, the largest buffer width shall be applied to ensure adequate protection for each critical area.
6. Reduction: unless otherwise specifically allowed, a critical area buffer may be reduced if the following apply:

a. A critical area study indicates the buffer may be reduced without resulting in impacts to the critical area.

b. The reduction may be fully mitigated through additional plantings, buffer increase elsewhere or other means, as approved by the Designated Official.

7. Buffer Averaging: Standard critical area buffers may be modified by averaging buffer widths if approved by the Designated Official as part of the Critical Area Study submitted either with, or prior to, the development application. Buffer width averaging is anticipated for the Project and shall be allowed within all wetland classes where the applicant demonstrates the following:

   a. That width-averaging will not adversely impact the wetland functional values;

   b. That the total area contained within the wetland buffer after averaging is no less than that contained within the standard buffer prior to averaging, except in the following situations: The Designated Official may consider relocation of averaged buffer to the buffer of other wetlands; and,

   c. Areas already protected by these Critical Area Regulations including the specific critical area or the required buffer, may not be used for buffer averaging credit.

C. Building Setback Areas: Building setback areas shall be established from the outer edge of the critical area buffer.

1. The minimum building setback area shall be fifteen (15) feet unless a reduction of this standard meets the following criteria and is approved by the Designated Official:

   a). The intrusion can be shown, through a critical area study which assumes implementation of appropriate mitigation, to have no adverse impact on the critical area;

   b). Construction techniques can be utilized that reasonably ensures no adverse impact to the critical area or buffer during construction activities;

   c). Design of the site and building(s) and, placement of the building(s) allow adequate physical and visual separation from nearby uses and are sensitive to the critical area; and,

   d). An area equal to 2(x) the intrusion shall be provided within the building setback area as pervious open space. This area shall be landscaped to be compatible with the adjoining critical area, as determined by the Designated Official.

2. Prohibitions on the use of hazardous or toxic substances and pesticides or certain fertilizers in this area shall be imposed for setbacks from streams and wetlands.

3. Minor structural intrusions (e.g. patios, sidewalks, roads, rockeries and walls less than 4 feet in height) into the area of the building setback may be allowed if the applicant proves to the Designated Official that such intrusions will not negatively affect the protection level provided by the buffer to the critical area.

4. Balconies located more than 30 feet above adjacent grade may extend into the Building Setback Area, subject to the applicant demonstrating to the Designated Official that the intrusions will not adversely impact the critical area.

5. The building setback area shall be illustrated on all implementing preliminary plats and final plats, site development permits, building permit site plans, and similar type of permits containing or adjacent to critical areas.

8.0 Temporary marking - Permanent survey marking - Signs

A. Temporary Marking: The location of the outer extent of the critical area buffer and building setback line pursuant to an approved Development or Land Use Permit shall be marked in the field with orange construction fencing and/or other appropriate apparatus, as determined by the Designated Official during critical area review. The location and presence of such markings in the field shall be approved by the Designated Official, prior to the commencement of permitted activities. Such field markings shall be maintained throughout the duration of the construction activities.

B. Survey Markers: Permanent survey stakes using iron or cement markers as established by current survey standards shall be set delineating the boundaries between adjoining properties and the critical areas tracts.

C. Signs: Boundaries between critical area tracts and/or areas with conservation easements and adjacent lands shall be identified using permanent signs explaining the type and value of the critical area, except the portions, if any, of a critical area that are adjacent to natural or wild areas. Whenever a trail enters a critical area buffer, the boundary shall be identified using permanent signs explaining the type and value of the critical area. The number of signs required by the Designated Official will be dependent upon the size of the critical areas and the use of the property.

9.0 Monitoring

A. The Designated Official shall require monitoring when mitigation is required for the alteration of a critical area and its buffer.

B. Frequency, detail and length of monitoring by the applicant will be included in the Mitigation Plan or the Critical Area Decision.

C. Where monitoring reveals a significant deviation from predicted impacts or a failure of mitigation measures, the applicant shall be responsible for appropriate corrective action which, when approved, shall be subject to further monitoring by the applicant.

10.0 Critical Areas Mitigation Fund

There is hereby created a Critical Areas Mitigation Fund which shall be administered by the Finance Department. All funds received from civil penalties resulting from violations of this appendix shall be deposited in the fund which shall be used only for the purpose of paying all or part of the cost and expense of enforcing and implementing this Appendix. Monies in said fund not needed for immediate expenditure shall be invested for the benefit of Critical Areas located within the Project; or, as otherwise directed by the Master Developer.

11.0 Allowed Critical Area Activities

A. The following activities shall be allowed within a critical area and buffer to the extent that they are not prohibited by any other ordinance or law and provided they are conducted using best management practices, except where such activities result in the conversion of a regulated critical area and buffer to an activity to which it was not previously subjected. Further that forest practices and conversions shall be governed by Chapter 76.09 RCW and its rules.

1. Conservation or preservation of soil, water, vegetation, fish, shellfish, and other wildlife;
2. Outdoor recreational activities, including fishing, trail activities & bird watching;
3. The noncommercial harvesting of wild vegetation in a manner that is not injurious to the critical area and provided the harvesting does not require tilling of soil, planting of crops,

or alteration of the wetland by changing existing topography, water conditions or water sources;

4. Education, scientific research, and use of designated trails;
5. Normal or emergency maintenance, repair, or operation of existing serviceable structures, facilities, or improved areas. Maintenance and repair does not include any modification that changes the character, scope, or size of the original structure, facility, or improved area and does not include the construction of a maintenance road;
6. Minor modification of existing serviceable structures (e.g. utilities, monitoring equipment, etc.) within a buffer where modification does not adversely impact wetland functions; and
7. Site investigative work necessary for land use application submittals such as delineations, surveys, soil logs, percolation tests and other related activities; and,
8. Removal of invasive or non-native vegetation or installation of habitat or water quality enhancing vegetation.

B. In critical area buffers, regulated activities which have minimal adverse impacts within the buffers and no adverse impacts on wetlands may be allowed through the Land Use Permit process, provided they are conducted using best management practices. These activities include:
   1. Low-intensity, passive recreation-related activities such as development of recreation trails & outlooks, nonpermanent wildlife watching blinds, short-term scientific or educational activities;
   2. Stormwater management facilities having no feasible alternative on-site locations, where appropriate mitigation in the form of restoration and/or enhancement is included, and which would not adversely affect the function or values of the buffer or wetland. Any buffer area displaced by a stormwater management facility shall be compensated for by adding buffer area so that no net loss of buffer area results from the placement of the facility. However, dispersion trenches (with prior approval by the Designated Official) which support wetland or stream water flows, do not require compensatory mitigation; and,
   3. Surface water discharge to a critical area or buffer from a detention facility, pre-settlement pond or other surface water management activity or facility may be allowed if the discharge enhances the critical area and/or does not increase the rate of flow, change the plant composition in a critical area, or decrease the water quality of the wetland or stream.

12.0 Mitigation plan information requirements

A required mitigation plan shall be prepared in consultation with the Designated Official and qualified professionals. The scope and specific requirements of a mitigation plan are dependent on the size and nature of the development proposal, and, the nature of the impacted critical area, the mitigation plan shall contain at a minimum the following components; however, the Designated Official may request additional information as required for the decision-making process:

A. Identification of Project Team: A Compensation Project Manager shall be named and the qualifications of each team member involved in preparing the mitigation plan and implementing and supervising the project shall be provided, including educational background and areas of expertise, training and experience with comparable projects.
B. Baseline Information: A written assessment and accompanying maps of the environmental conditions of the impacted regulated wetland and the mitigation-site if different.
C. Environmental Goals and Objectives: A written report shall be provided identifying goals and objectives of the mitigation plan. The goals and objectives shall be related to the functions and

values of the original wetland or if out-of-kind, the type of wetland to be emulated and an analysis of the likelihood of success of the created or restored wetland.

D. Evaluation Criteria: Specific criteria, including ecological, geological, or hydrological criteria, shall be provided for evaluating whether or not the goals and objectives of the project will be met and whether or not remedial action or contingency measures should be initiated.
E. Detailed Landscape Construction Plans: Drawings and written specifications describing the mitigation techniques and materials to be used.
F. Monitoring Program: A program outlining the approach for monitoring construction of the compensation project and for assessing a completed project shall be provided, including a protocol of how the monitoring data will be evaluated by agencies that are tracking the progress of the mitigation project.
G. Contingency Plan: Identification of potential courses of action, and any corrective measures to be taken when monitoring or evaluation indicates project performance standards are not being met.

13.0 Bonds for restoration and mitigation activities

A. Performance Bonds: Mitigation required pursuant to a development or utility proposal must be completed prior to the Designated Official's granting of final approval of the development proposal or utility permit. If the applicant demonstrates that seasonal requirements or other circumstances beyond its control prevent completion of the mitigation prior to final approval, the applicant may post a performance bond equal to one hundred fifty (150) percent of the total cost of the unfinished mitigation project to complete, or other security instrument approved by the Designated Official which guarantees that all required mitigation measures will be completed no later than the time established by the Designated Official in accordance with this Appendix.
B. Maintenance/Monitoring Bonds: The Designated Official shall require the applicant whose development proposal is subject to a mitigation plan to post a maintenance/monitoring bond equal to fifty (50) percent of the estimated maintenance and monitoring cost, or other security instrument approved by the Designated Official in an amount determined sufficient to guarantee satisfactory workmanship, materials, and performance of structures and improvements allowed or required by this appendix for a period of five (5) years.
C. Performance and maintenance/monitoring bonds or other security instruments shall also be required for restoration of a critical area not performed as part of a mitigation plan, except no bond shall be required for minor stream restoration carried out pursuant to this Appendix.
D. Bonds or other security instruments shall be in a form and amount approved by the Designated Official and the City Attorney and shall remain in effect until the Designated Official determines in writing that performance and maintenance standards have been met.
E. Enforcement of Bonds: Depletion, failure, or collection of bond funds shall not discharge the obligation of an applicant or violator to complete required mitigation or restoration.

14.0 Enforcement and penalties for critical areas

A. The enforcement provisions for critical areas are intended to encourage compliance and protect critical areas and the public from harm. To achieve these ends, violators will not only be required to restore damaged critical areas, insofar as that is possible, but will also be required to pay a civil penalty for the redress of ecological, recreational, and economic values lost or

damaged due to their unlawful action. The provisions in this section are in addition to, and not in lieu of, any other penalty, sanction or right of action provided by law.

B. Each violation of this Appendix, or any rule or regulation adopted, or any permit, permit condition, or order issued pursuant to this Appendix, shall be a separate offense, and, in the case of a continuing violation, each day's continuance shall be deemed to be a separate and distinct offense.
C. Any person incurring a penalty may apply in writing within thirty (30) calendar days of receipt of the penalty to the Designated Official for remission or mitigation of such penalty. Upon receipt of the application, the Designated Official may remit or mitigate the penalty only upon a demonstration of extraordinary circumstances, such as the presence of information or factors not considered in setting the original penalty.
D. All costs, fees, and expenses in connection with enforcement actions may be recovered as damages against the violator.
E. Aiding or Abetting: Any person who, through an act of commission or omission procures, aids or abets in the violation shall be considered to have committed a violation for the purposes of the penalty.
F. The Designated Official may bring appropriate actions at law or equity, including actions for injunctive relief, to ensure that no uses are made of critical areas or their buffers that are inconsistent with this Appendix.

15.0 Civil penalties

A. Any person in violation of this appendix shall be subject to civil penalties assessed as follows:
   1. An amount reasonably determined by the Designated Official to be equivalent to the economic benefit that the violator derives from the violation as measured by the greater of the resulting increase in market value of the property or the value received by the violator, or savings of construction costs realized by the violator performing any act in violation of this Appendix.
   2. An amount, not to exceed $25,000, that is reasonably based upon the nature and gravity of the violation and the cost to the City of enforcing this Appendix against the violator.
   3. Penalties under this section shall be imposed by a notice in writing, either by certified mail with return receipt requested or by personal service, to the person incurring the same from the City. The notice shall describe the violation, approximate the date(s) of violation, and shall order the acts constituting the violation to cease and desist, or, in appropriate cases, require necessary corrective action within a specific time.
   4. Any civil penalty recovered under this section shall be deposited in the Critical Areas Mitigation Fund for use by the City in protecting or restoring critical areas that are part of the Project or as otherwise directed by the Master Developer.
   5. No civil penalty shall be imposed under this Appendix upon the Designated Official, or City employees for any act or omission relating to the administration or enforcement of this Appendix.

16.0 Notices and orders

The Designated Official is authorized to issue violation notices and administrative orders, levy fines, and/or institute legal actions in court.

A. Recourse to any single remedy shall not preclude recourse to any of the other remedies.

B. The Designated Official may serve upon a person a cease and desist order if an activity being undertaken on a critical area or its buffer is in violation of this appendix or related Designated Official's decision. Whenever any person violates this appendix or any permit issued to implement this appendix, the Designated Official may issue an order reasonably appropriate to cease such violation and to mitigate any environmental damage resulting therefrom.
   1. The order shall set forth and contain:
      a. A description of the specific nature, extent, and time of violation and the damage or potential damage; and,
      b. A notice that the violation or the potential violation cease and desist or, in appropriate cases, the specific corrective action to be taken within a given time. A civil penalty may be issued with the order.
   2. The cease and desist order issued under this section shall become effective immediately upon receipt by the person to whom the order is directed.
   3. Failure to comply with the terms of a cease and desist order can result in enforcement actions including, but not limited to, the issuance of a civil penalty.
   4. Orders and penalties issued pursuant to this subsection may be appealed.

C. Any person who undertakes any activity within a critical area or its buffer without first obtaining a permit required by this Appendix, except as allowed in each section under the allowed activities provision, or any person who violates one (1) or more conditions of any permit required by this Appendix or of any order issued pursuant to subsection (C)(2) of this section, shall incur a penalty allowed per violation.
   1. In the case of a continuing violation, each permit violation and each day of activity without a required permit shall be a separate and distinct violation.
   2. The penalty amount shall be set in consideration of the previous history of the violator and the severity of the environmental impact of the violation.
   3. Penalties provided from this section shall be appealable to King County Superior Court.

17.0 Criminal penalties

As an alternative to any other judicial or administrative remedy provided in this Appendix or by law or other ordinance, any person who willfully or knowingly violates any provision of this Appendix, or any order issued pursuant to this Appendix, or by each act of commission or omission procures, aids or abets such violation, is guilty of a misdemeanor and upon conviction shall be punished by a fine not to exceed $1,000 and/or imprisonment in the City jail for a term not to exceed ninety (90) days. Each day such violation continues to occur, shall be considered an additional misdemeanor offense.

Exhibit J-1 Wetlands & Tibbetts Creek

Exhibit J-2 Northern Enhancements

Exhibit J-3 Southern Enhancement Area

Exhibit J-4 Off Site Improvements

Exhibit J-5 Building Encroachment

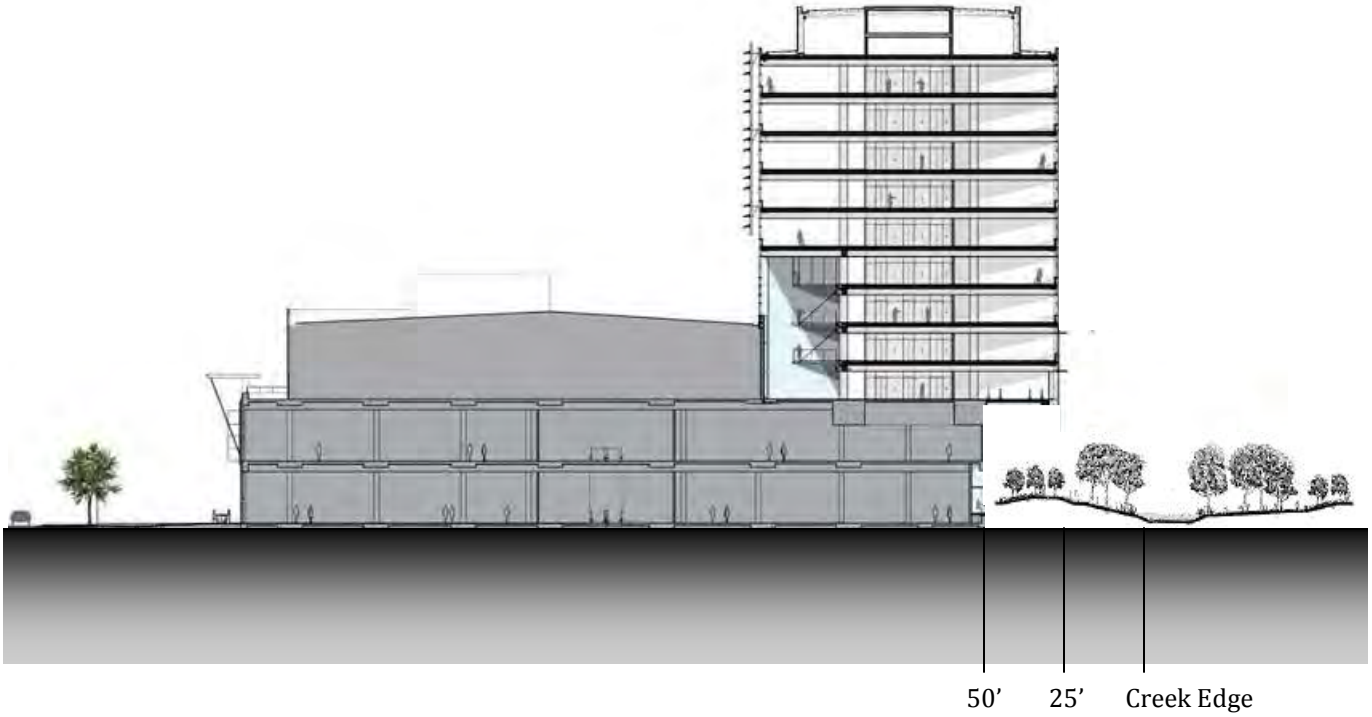

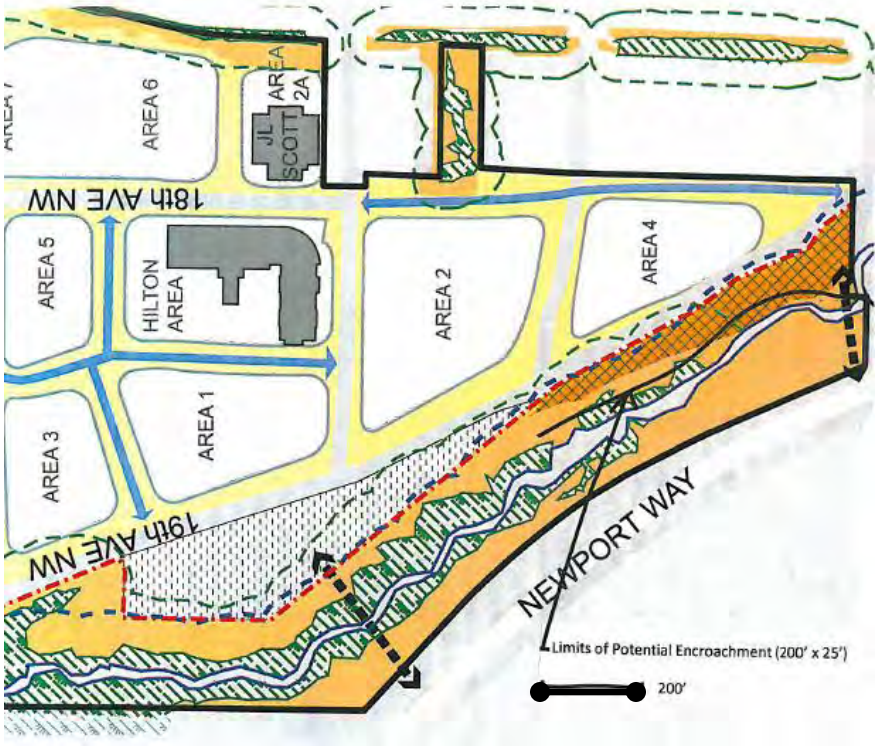

Exhibit J-6 Interim 100' line from Tibbetts Creek

APPENDIX D

HYLA CROSSING PUMPED STORMWATER OUTFALL ALTERNATIVES ANALYSIS

Copyright © 2021 Talasaea Consultants, Inc.

Hyla Crossing Pumped Stormwater Outfall Alternatives Analysis

Purpose

The purpose of this document is to review three stormwater outfall alternatives for the proposed pumped stormwater discharge to Lake Sammamish from Hyla Crossing in Issaquah.

Project Description

Hyla Crossing is an approximately 60 acre collection of developed parcels located in the urban growth boundary of Issaquah south of I-90 and bounded by Tibbetts Creek and SR-900. Currently, the stormwater runoff from the site discharges to Tibbetts Creek with no engineered flow control. Per the Master Development Agreement (MDA), future redevelopment of Hyla Crossing will be required to meet Level 2 Flow Control requirements per the 2009 KCSWDM. Also per the MDA, Level 2 Flow Control will be met by pumping stormwater to Lake Sammamish rather than typical storm detention facilities due to the high groundwater table and shallow stormwater infrastructure.

The Level 2 Flow Control Volume will be pumped across I-90 through a buried HDPE force main installed using trenchless construction methods. Once the force main crosses I-90, it must cross the Greenwood Trust wetland before it can enter Lake Sammamish.

Outfall Alternatives

Three different outfall options are considered in this analysis. In the latter two options, the City may elect to require a compacted gravel access road over the length of buried force main to allow for maintenance access and prevent vegetation growth over the pipe. The gravel access road should have periodic inspection and vegetation removal, which cannot be done with the use of chemicals or pesticides. Each outfall option will require annual maintenance should they become blocked with debris or vegetation; however, each is expected to be robust and require little oversight. The three outfall options are described below and compared in Table 1.

Option 1: Upland Dispersion Trench

The force main crosses under I-90, runs west approximately 700 feet terminating at an energy dissipating manhole adjacent to NW Sammamish Road within the Greenwood Trust Wetland. The flowpath within the wetland is non-uniform with an average slope of 0.7% toward Lake Sammamish. The manhole has a weir opening near the top of the structure which releases water to a dispersion trench parallel to NW Sammamish Road. The dispersion trench is a 90-foot-long, 2-foot-wide, bottomless concrete structure with the top of concrete level with existing grade, see Figures 1 and 2. Preliminary open channel flow calculations at various cross-sections within the wetland indicate the average monthly post-developed water level fluctuation varies from 2-inches to 4-inches vertically. The maximum monthly post-developed water level fluctuation is approximately 4-inches to 8-inches vertically depending on cross-section.

Option 2: Near Shore Outfall

The force main crosses under I-90, runs parallel to NW Sammamish Road approximately 800 feet, then angling northwest through the wetland toward the lakeshore while avoiding the Schneider Creek 100-foot buffer. The forcemain terminates at an energy dissipating grate inlet approximately 10-feet upland of the Lake Sammamish Ordinary High Water Line. The grate inlet has a flat open grated top which discharges water to a rock pad directed toward Lake Sammamish. See Figures 3 and 4.

Option 3: Submerged Lake Outfall

The force main is routed similar to Option 2, except that it continues approximately 200 feet offshore before discharging to the lake through an upturned pipe elbow. It is important to note that the actual shoreline and lake bed drop-off is significantly more gradual than profiles shown in RH2 and Herrera figures used to develop the MDA and SEPA review. This requires the implementation of longer coffer dams to install the submerged outfall. See Figure 3.

Figures Index

Figure 1: Upland Dispersion Trench Plan
Figure 2: Upland Dispersion Trench Detail
Figure 3: Near Shore and Deep Lake Outfalls Plan and Profile
Figure 4: Energy Dissipating Grate Inlet

Table 1: Outfall Alternatives

	Option 1: Upland Dispersion Trench		Option 2: Near Shore Outfall		Option 3: Deep Lake Outfall	
	Pros	Cons	Pros	Cons	Pros	Cons
Construction Impact	• Least amount of wetland area impacted during construction • Construction immediately adjacent to NW Sammamish Rd			• Open trench construction through wetland will require heavy equipment access along pipe alignment		• Open trench construction similar to Option 2 • Outfall will need to cross under an existing 48-inch Sanitary Sewer Main near shore. • Dewatering and coffer dams required for approximately 250-feet through shallow lake bottom • Lake bottom disturbance required
Permanent Impact	• Permanent access pad is mostly outside wetland boundary and adjacent to NW Sammamish Road.	• Encumbers park property with both drainage facility and stormwater runoff • Visible from NW Sammamish Rd	• Small surface footprint near shore.	• Permanent access road may be required along pipe alignment • Visible from surface	• Except for permanent access road, no drainage facility visible from surface	• Permanent access road may be required along pipe alignment similar to Option 2 • An aquatic lease from DNR is likely required
Maintenance	• Easiest to access for inspection and maintenance • No access road to maintain	• Vegetation removal from outlet and trench is required • Outlet and trench are larger maintenance area than Option 2	• Visible access for inspection from surface • Smaller outlet footprint to maintain than Option 1	• Vegetation removal from outlet and access road required • Outlet structure remote from NW Sammamish Rd	• Out of sight, out of mind.	• Requires diving to inspect and maintain submerged outlet • Potential for damage by boat anchors

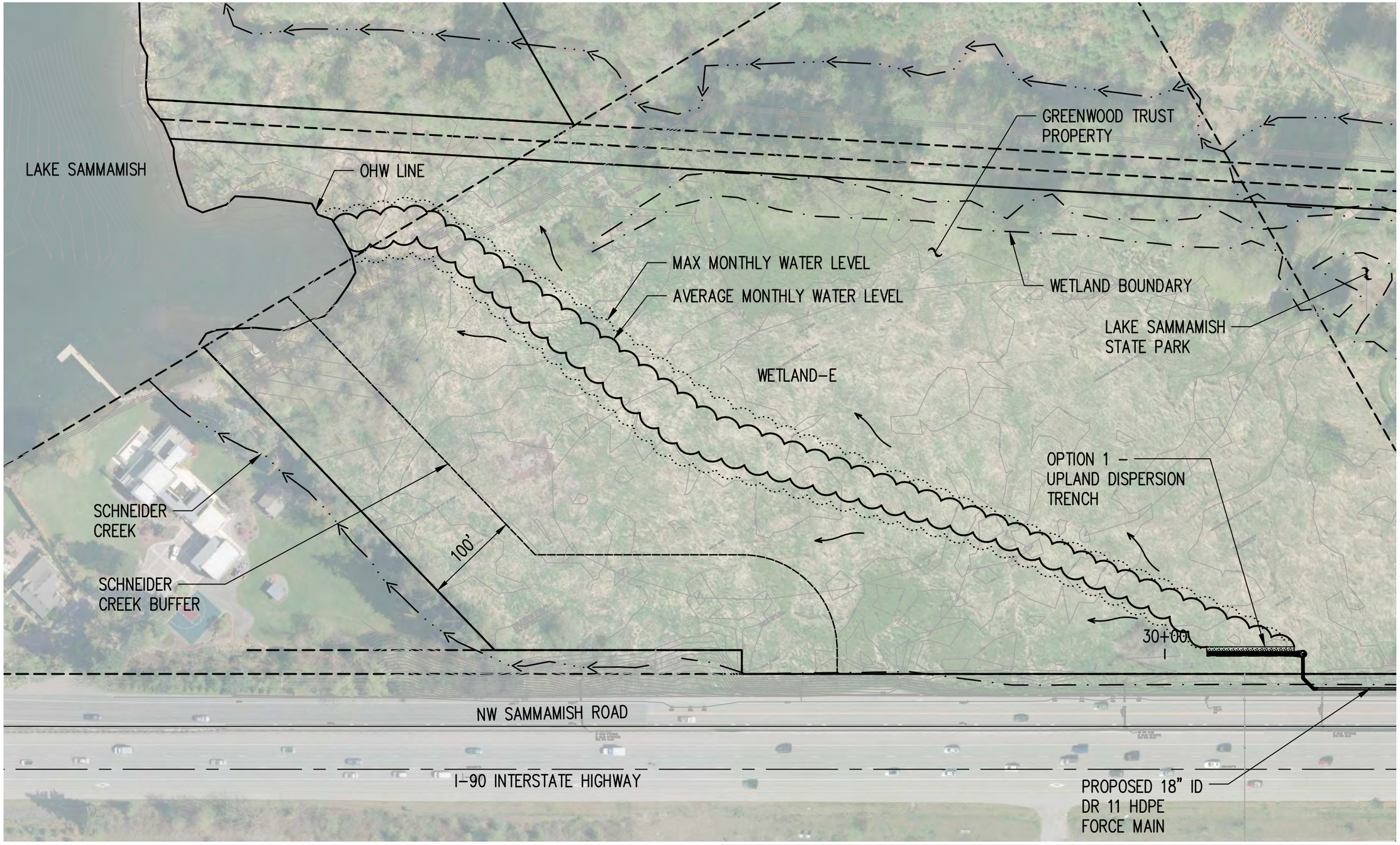

0 50 100 200

1 inch = 100 feet

NORTH

Project Title: HYLA CROSSING PUMPED STORM DISCHARGE	Drawing Title: FIGURE 1 - UPLAND DISPERSION TRENCH PLAN	Scale: 1" = 100'
Client: ROWLEY PROPERTIES INC.	kpff, 1601 5th Avenue, Suite 1600, Seattle, WA 98101, 206.622.5822, www.kpff.com	Date: MARCH 2019 / Drawn/Ck'd By: DY/CB

May 22, 2019 – 2:22pm chrisb Z:\1800001-1800999\1800530 Hyla Crossing Direct Lake Discharge\CADD\Exhibits\2019-03-28 Maintenance Options Exhibits\HCPSD – 01 Upland Dispersion Trench.dwg
Xref Filename: \ X-HCPSD-SV \ X-RPW-SP \ HCPSD-GIS \ X-HCPSD-SP \ X-RPW-BLDG \ TITLE BLOCK \ TAL-1775 (CA Linework)\

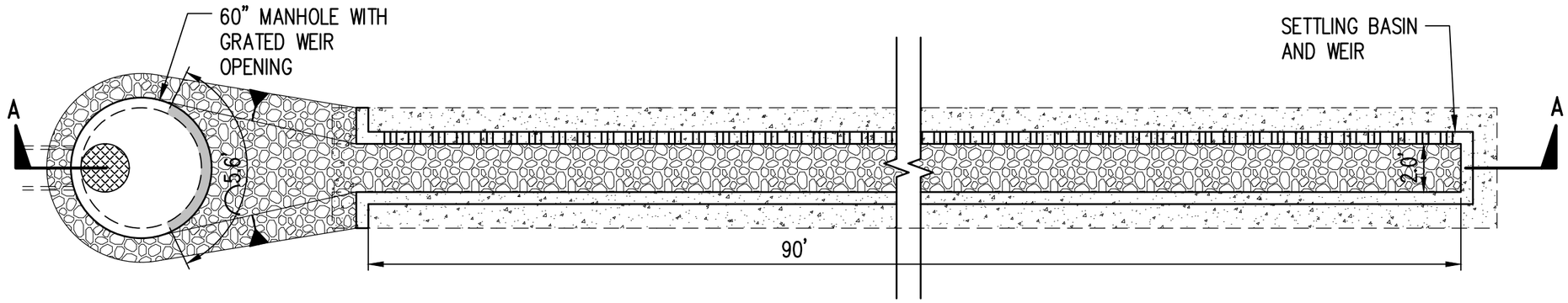

PLAN

SCALE: 1"=5'

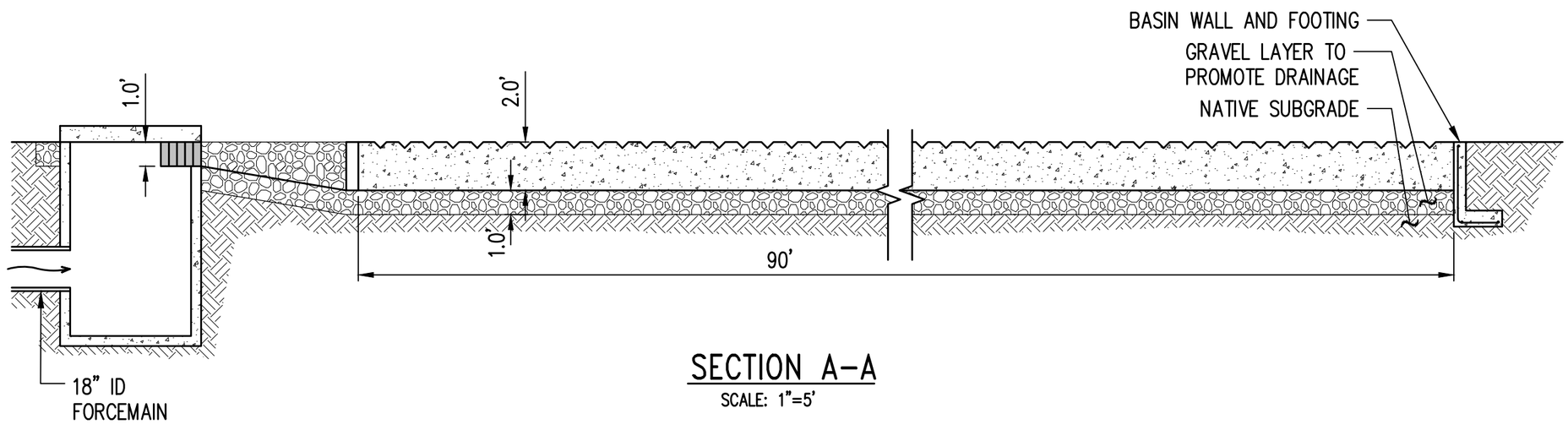

SECTION A–A

SCALE: 1"=5'

Project Title HYLA CROSSING PUMPED STORM DISCHARGE	Drawing Title FIGURE 2 - DISPERSION TRENCH DETAIL	
Client ROWLEY PROPERTIES INC.	kpff 1601 5th Avenue, Suite 1600 Seattle, WA 98101 206.622.5822 www.kpff.com	Scale AS NOTED
		Date MARCH 2019 — Drawn/Ck'd By DY/CB

May 22, 2019 – 12:01pm chrisb Z:\1800001-1800999\1800530 Hyla Crossing Direct Lake Discharge\CADD\Exhibits\2019-03-28 Maintenance Options Exhibits\HCPSD – 01 Upland Dispersion Trench.dwg
Xref Filename: \ X-HCPSD-SV \ X-RPW-SP \ HCPSD-GIS \ X-HCPSD-SP \ X-RPW-BLDG \ TITLE BLOCK \ TAL-1775 (CA Linework)\

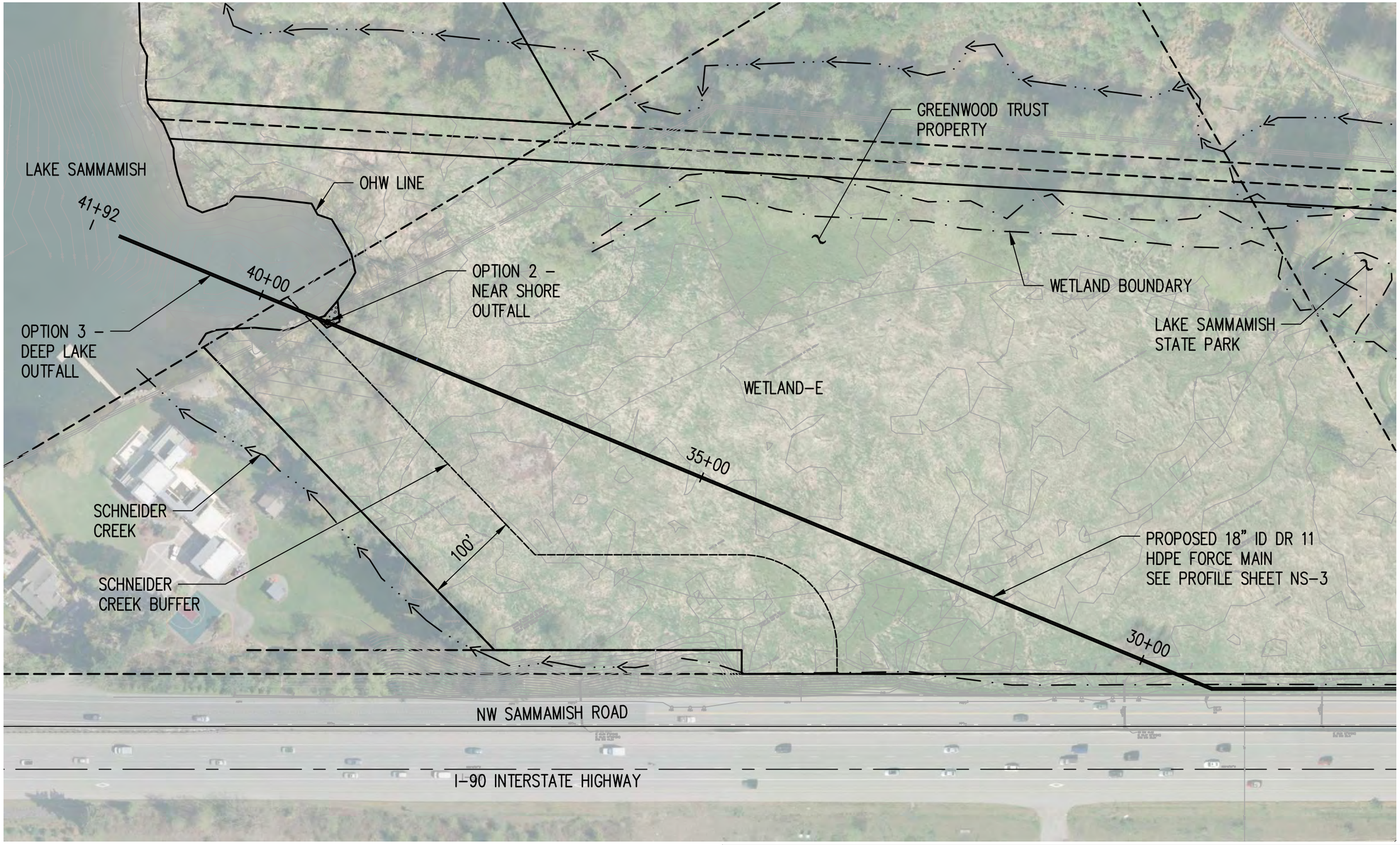

0 50 100 200

1 inch = 100 feet

NORTH

Project Title HYLA CROSSING PUMPED STORM DISCHARGE	Drawing Title FIGURE 3 - NEAR SHORE AND DEEP LAKE OUTFALL PLAN	
Client ROWLEY PROPERTIES INC.	kpff 1601 5th Avenue, Suite 1600 Seattle, WA 98101 206.622.5822 www.kpff.com	Scale 1" = 100' Date MARCH 2019 Drawn/Ck'd By DY/CB

May 22, 2019 – 12:28pm chrisb Z:\1800001-1800999\1800530 Hyla Crossing Direct Lake Discharge\CADD\Exhibits\2019-03-28 Maintenance Options Exhibits\HCPSD – 03 Near Shore and Deep Lake Outfall.dwg
Xref Filename: \ X-HCPSD-SV \ X-RPW-SP \ HCPSD-GIS \ X-HCPSD-SP \ X-RPW-BLDG \ TITLE BLOCK \ TAL-1775 (CA Linework)\

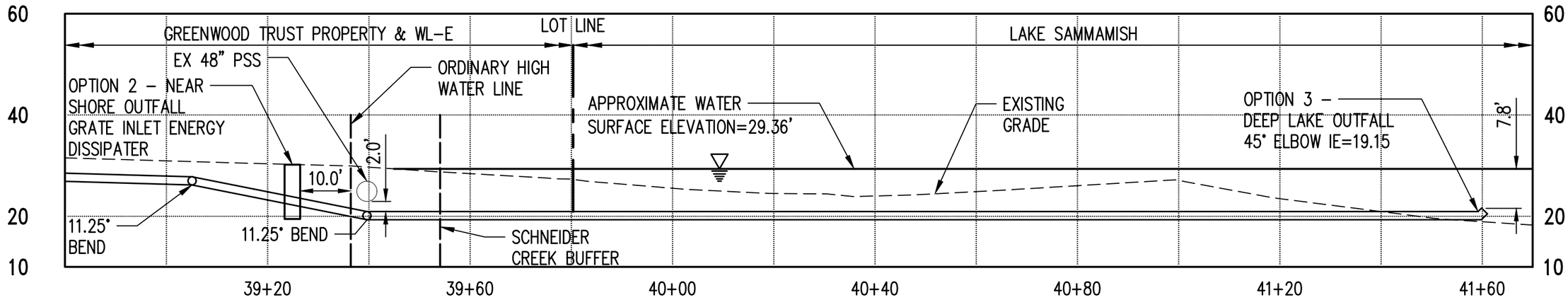

Project Title HYLA CROSSING PUMPED STORM DISCHARGE	Drawing Title FIGURE 3 - NEAR SHORE AND DEEP LAKE OUTFALL PROFILE		
Client ROWLEY PROPERTIES INC.	kpff 1601 5th Avenue, Suite 1600 Seattle, WA 98101 206.622.5822 www.kpff.com		Scale 1" = 20'
		Date MARCH 2019	Drawn/Ck'd By DY/CB

May 22, 2019 - 12:26pm chrisb Z:\1800001-1800999\1800530 Hyla Crossing Direct Lake Discharge\CADD\Exhibits\2019-03-28 Maintenance Options Exhibits\HCPSD - 03 Near Shore and Deep Lake Outfall.dwg
Xref Filename: \ X-HCPSD-SV \ X-RPW-SP \ HCPSD-GIS \ X-HCPSD-SP \ X-RPW-BLDG \ TITLE BLOCK \ TAL-1775 (CA Linework)\

DRAWN BY: ADAM COCHRAN

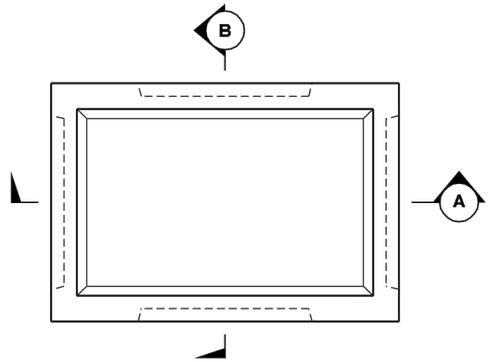

TOP VIEW

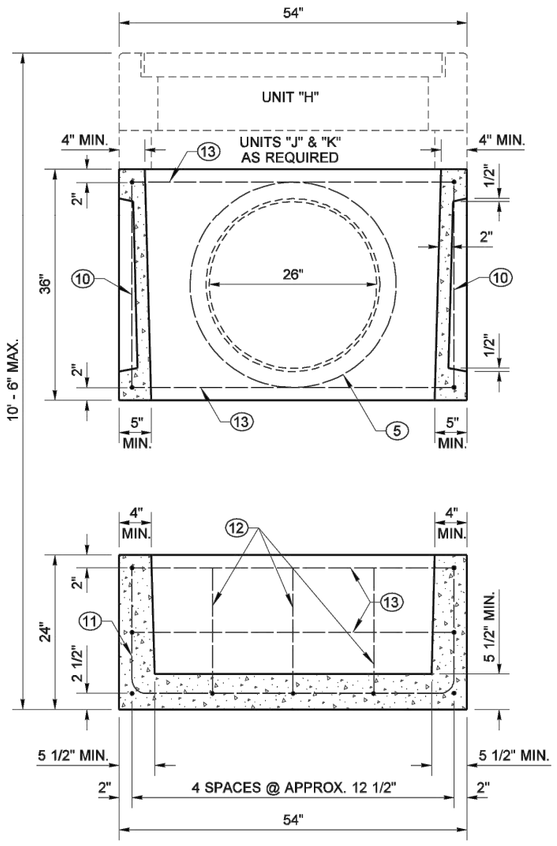

SECTION (A) TWO PIECE BASE

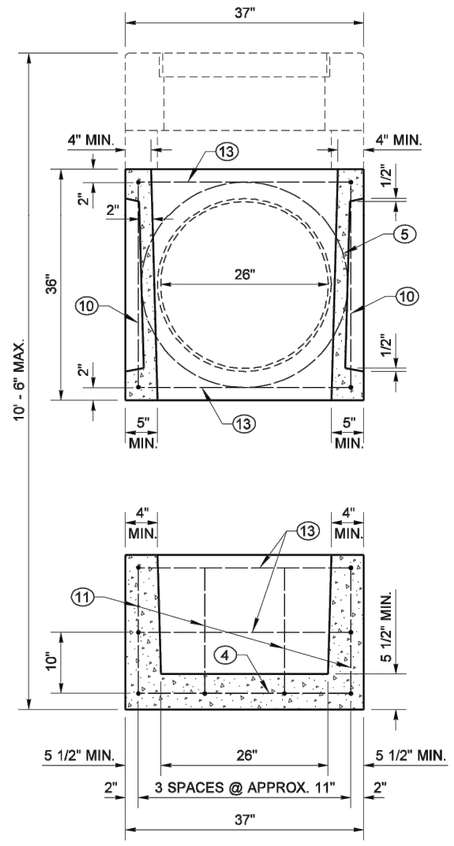

SECTION (B) TWO PIECE BASE

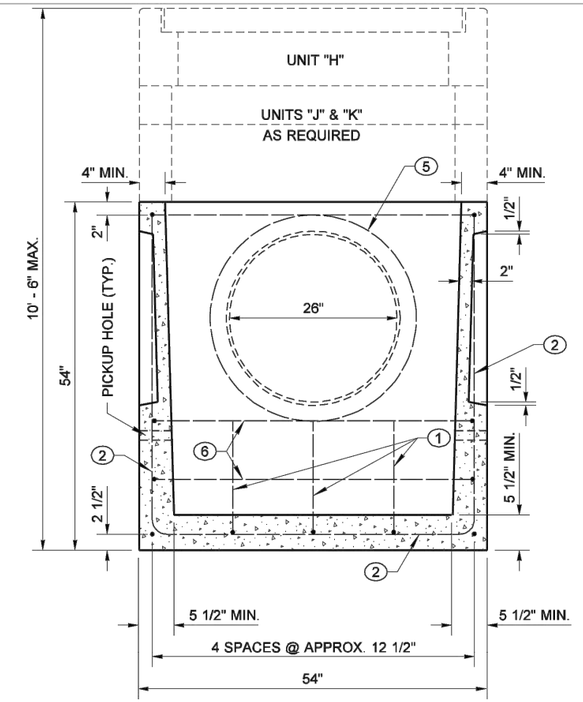

SECTION (A) ONE PIECE BASE

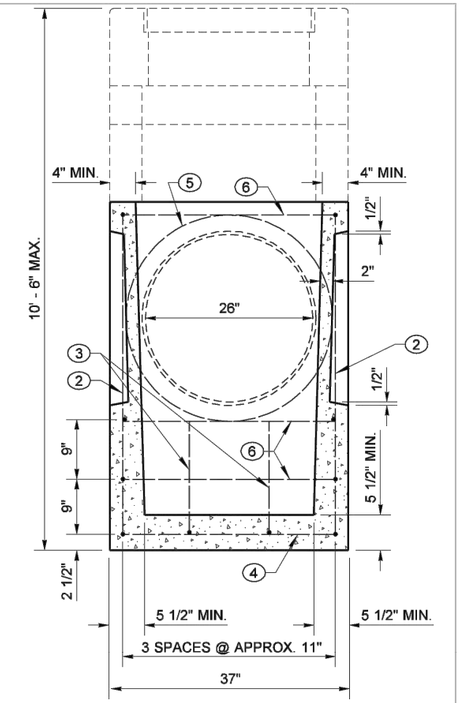

SECTION (B) ONE PIECE BASE

PIPE ALLOWANCES	
PIPE MATERIAL	MAXIMUM INSIDE DIAMETER
REINFORCED OR PLAIN CONCRETE	18"
ALL METAL PIPE	21"
CPSSP * (STD. SPEC. 9-05.20)	18"
SOLID WALL PVC (STD. SPEC. 9-05.12(1))	21"
PROFILE WALL PVC (STD. SPEC. 9-05.12(2))	21"

* CORRUGATED POLYETHYLENE STORM SEWER PIPE

EXPIRES JULY 1, 2007

NOTE: THIS PLAN IS NOT A LEGAL ENGINEERING DOCUMENT BUT AN ELECTRONIC DUPLICATE. THE ORIGINAL, SIGNED BY THE ENGINEER AND APPROVED FOR PUBLICATION, IS KEPT ON FILE AT THE WASHINGTON STATE DEPARTMENT OF TRANSPORTATION. A COPY MAY BE OBTAINED UPON REQUEST.

GRATE INLET TYPE 2

STANDARD PLAN B-35.40-00

SHEET 1 OF 2 SHEETS

APPROVED FOR PUBLICATION

Harold J. Peterfeso — STATE DESIGN ENGINEER — *06-08-06* — DATE

Washington State Department of Transportation

Project Title	Drawing Title		
HYLA CROSSING PUMPED STORM DISCHARGE	FIGURE 4 - ENERGY DISSIPATING GRATE INLET		
Client: ROWLEY PROPERTIES INC.	kpff 1601 5th Avenue, Suite 1600 Seattle, WA 98101 206.622.5822 www.kpff.com	Date: MARCH 2019	Scale / Drawn/Ck'd By: DY/CB

May 22, 2019 – 12:38pm chrisb Z:\1800001-1800999\1800530 Hyla Crossing Direct Lake Discharge\CADD\Exhibits\2019-03-28 Maintenance Options Exhibits\HCPSD – 01 Upland Dispersion Trench.dwg
Xref Filename: \ X-HCPSD-SV \ X-RPW-SP \ HCPSD-GIS \ X-HCPSD-SP \ X-RPW-BLDG \ TITLE BLOCK \ TAL-1775 (CA Linework)\

APPENDIX E

KELLER FARM MITIGATION BANK USE OVERVIEW

Copyright © 2021 Talasaea Consultants, Inc.

Introduction

Suggested text for this section is:

Background

The **Project Name** is located within the Service Area of the Keller Farm Mitigation Bank (KFMB). The project applicant is requesting that mitigation credits from KFMB be used to compensate for impacts to critical and buffer areas (or **describe specific impacts**) associated with the project. This Bank Use Plan describes the rationale for purchasing credits at the Keller Farm Mitigation Bank to compensate for impacts, and was prepared following agency guidance on preparing mitigation plans and the use of mitigation banks including: the Interagency Review Team for Washington State Guidance Paper on *Using Credits from Mitigation Banks: Guidance to Applicants on Submittal Contents for Bank Use Plans* (2009), Washington State's Mitigation Banking Statutes (RCW 90.84 and WAC 173-700), the Washington State Department of Ecology's (Ecology) *Wetland Mitigation in Washington State* (2006), and the U.S. Army Corps of Engineers (Corps) *Compensatory Mitigation for Losses of Aquatic Resources* (33 C.F.R. § 332)(2008).

The Keller Farm Mitigation Bank is a 75-acre certified mitigation bank located, in Redmond, WA. The Bank location is shown in Figure 1. The Bank Service Area is shown in Figure 2. KFMB is an "urban" bank that provides mitigation opportunities for urbanizing areas in east King County and south Snohomish County. KFMB was certified by federal, state, and local regulatory agencies in December 2019 and has mitigation credits available to compensate for approved impacts to wetlands and other critical areas including wetland and stream buffers and riparian areas.

As stated in the Appendix A of the Mitigation Banking Instrument for the KFMB, the purpose of the Bank is to generate mitigation credits for projects that will have an adverse impact on the aquatic environment and that need to compensate for those impacts as a condition of their permits or other regulatory requirements resulting from project impacts. The Bank site, known locally as "the Keller Farm", has been identified as a high priority restoration site since the 1990s and was specifically identified as a potential mitigation bank site in the Final Lake Washington/Cedar/Sammamish Watershed (WRIA 8) Chinook Salmon Conservation Plan (2005). The Bank site was identified as a "Near Term Action" important to regional salmonid habitat restoration efforts as part of the Lake Washington/Cedar/Sammamish Salmon Conservation Plan for Water Resource Inventory Area (WRIA) 8, adopted by the National Oceanic and Atmospheric Administration (NOAA) and implemented by local stakeholders to achieve Chinook salmon recovery consistent with the Endangered Species Act (Chinook Salmon Conservation Plan, 2005; ESA 16 U.S.C. S 1531).

Restoration goals at KFMB address the limiting factors in the watershed related to loss of wetland habitat and riparian vegetation communities, and alterations to floodplain and stream habitat.

Consultant Qualifications

List project team consultants and describe Consultant Qualifications to complete the Bank Use plan.

Refer to this document for more guidance on preparing a Bank Use Plan - Interagency Review Team for Washington State. 2009. Using Credits from Wetland Mitigation Banks: Guidance to Applicants on the Submittal Contents for Bank Use Plans. Revised February 19. Available at: https://fortress.wa.gov/ecy/ezshare/sea/MitigationBanking/Templates/BankUsePlan.pdf

Project Description

Provide a description of the development project including location, Service Area to be used, and justification for using Service Area, the types of activities that will impact wetlands, streams, or buffers and a general description of those impacts. If a detailed project description is available in other documents in the application package, summarize the project description and cite the more detailed documents.

The specific critical area impact must be allowed to be mitigated in the Service Area where the impact site is located. The notes on Figure 2 describes the types of critical areas impacts that can be mitigated within each Service Area.

Existing Conditions

Describe existing conditions of the proposed project site including existing and surrounding land uses, landscape position, vegetation, soils, hydrology, and existing conditions of critical areas present (wetlands, streams, buffers). Cite more detailed documents as appropriate, such as critical areas reports prepared for the project.

Refer to this document for more guidance on preparing a Bank Use Plan - Interagency Review Team for Washington State. 2009. Using Credits from Wetland Mitigation Banks: Guidance to Applicants on the Submittal Contents for Bank Use Plans. Revised February 19. Available at: https://fortress.wa.gov/ecy/ezshare/sea/MitigationBanking/Templates/BankUsePlan.pdf

Avoidance and Minimization of Impacts

Describe how adverse impacts, both direct and indirect, to wetlands, streams, and buffers, as appropriate, will be avoided and minimized by the project to the greatest extent practicable. This should include consideration of project location, design, construction practices, monitoring efforts and/or other relevant factors. Cite more detailed documents as appropriate, such as critical areas reports prepared for the project.

If other sites were considered and rejected on the basis of critical area or buffer impacts or other environmental impacts, briefly mention them here. If a Clean Water Act Section 404(b)(1) Alternatives Analysis is required (see https://www.epa.gov/cwa-404/memorandum-appropriate-level-analysis-required-evaluating-compliance-cwa-section-404b1 and https://www.nws.usace.army.mil/Portals/27/docs/regulatory/Forms/Alternative%20Analysis%20Guidance%20Enclosure%20(10-23-03).pdf for information on alternatives analysis) or a Floodplain Habitat Assessment (see https://www.fema.gov/media-library/assets/documents/161009 and https://www.fema.gov/media-library-data/1383598118060-e34756afe271d52a0498b3a00105c87b/Puget_Sound_R10_Habitat_Assess_guide.pdf for more information), please cite those documents here.

If site-specific measures were used adjacent to specific wetlands etc., a table similar to the following example may be useful:

Example Table 1
Avoidance and Minimization Measures

Wetland Identifier	Total Wetland Area (acres)	Potential Fill in Wetland Prior to Avoiding and Minimizing (acres)	Proposed Fill in Wetland (acres)	Avoidance and Minimization
A	1.01	0.08	0.03	Stormwater outfall designed to minimize impacts to wetland.
B	0.46	0.46	0.46	Impacts unavoidable – no practicable methods for reducing wetland impacts in this area while still meeting project goals for improved safety.
C	5.88	2.43	0.95	A retaining wall will be constructed along the entirety of this wetland to avoid and minimize impacts. A new ecology embankment will be constructed that will extend the wall an additional 10 feet to the west. This additional 10 feet is required to meet the flow (head) requirements to allow the ecology embankment to function properly.
D	2.43	0.40	0	Impacts to wetland avoided entirely by changing road alignment to widen toward the median.
TOTALS	**9.78**	**3.37**	**1.44**	

Refer to this document for more guidance on preparing a Bank Use Plan - Interagency Review Team for Washington State. 2009. Using Credits from Wetland Mitigation Banks: Guidance to Applicants on the Submittal Contents for Bank Use Plans. Revised February 19. Available at: https://fortress.wa.gov/ecy/ezshare/sea/MitigationBanking/Templates/BankUsePlan.pdf

Examples of impact avoidance/minimization for several types of development include:

• Commercial facility: Minimizing new impervious surface, using pervious surfaces for parking lots, using infiltration to treat stormwater, enhancing wetland buffers, providing appropriate water quality treatment, reducing the project footprint from the original proposal, using native landscape plants, using integrated pest management techniques, using other low impact development measures, and others.

• Road Widening: widening asymmetrically to avoid wetlands, widening toward the road median, using retaining walls to reduce side slopes, minimizing new impervious surface by lane re-striping, using road shoulder-installed filters for water quality treatment, locating stormwater treatment facilities outside of wetlands, and others.

• Residential Development: Retaining native vegetation where possible, infiltrating roof runoff, using pervious surfaces for driveways, using other low impact development measures, enhancing wetland buffers, and others.

Refer to this document for more guidance on preparing a Bank Use Plan - Interagency Review Team for Washington State. 2009. Using Credits from Wetland Mitigation Banks: Guidance to Applicants on the Submittal Contents for Bank Use Plans. Revised February 19. Available at: https://fortress.wa.gov/ecy/ezshare/sea/MitigationBanking/Templates/BankUsePlan.pdf

Unavoidable Wetland, Stream or Buffer Impacted Acreage

Describe adverse impacts, both direct and indirect, to wetlands, streams, and buffers. Summarize the areal impacts using a table similar to the following examples. Cite corresponding drawings in the application package or append to the Bank Use Plan.

Example tables:

Expected Impacts to Wetlands

Wetland Identifier	Wetland Area (acres)	Permanently Filled Wetland Area (acres)	Temporarily Impacted Wetland Area (acres)	Indirect Impact Area (acres)	Cowardin Classification	Ecology Rating	Local Jurisdiction Rating	HGM Classification
A	1.01	0.03	0	0	PEM	IV	4	Depressional
B	0.46	0.46	0	0	PEM	IV	4	Depressional
C	5.88	0.95	0.52	0	PSS	III	3	Riverine
TOTALS	**7.35**	**1.44**	**0.52**	**0**				

Table 2. Summary of Wetland Impacts.

Impact Area	Category	Cowardin Class	HGM Class	Impact Type	Impact Amount
Wetland A	IV	Emergent	Slope	Direct (fill)	0.22 acres (9,622 sq. ft.)
				Indirect (insufficient buffer)	0.44 acres (18,987 sq. ft.)
Wetland B	IV	Emergent	Slope	Direct (fill)	0.05 acres (2,190 sq. ft.)
				Indirect (insufficient buffer)	0.25 acres (10,985 sq. ft.)
Wetland C	IV	Emergent	Slope	Direct (fill)	0.03 acres (1,385 sq. ft.)
Wetland D	IV	Emergent	Slope	Indirect (insufficient buffer)	0.02 acres (817 sq. ft.)
				Temporary (grading)	0.03 acres (1,156 sq. ft.)
Wetland D Buffer				Temporary (grading)	0.30 acres (13,111 sq. ft.)
Wetland E	IV	Emergent, Scrub-Shrub, Forested	Depressional	Indirect (insufficient buffer)	0.01 acres (594 sq. ft.)
				Direct Total	13,197 sq. ft.

Refer to this document for more guidance on preparing a Bank Use Plan - Interagency Review Team for Washington State. 2009. Using Credits from Wetland Mitigation Banks: Guidance to Applicants on the Submittal Contents for Bank Use Plans. Revised February 19. Available at: https://fortress.wa.gov/ecy/ezshare/sea/MitigationBanking/Templates/BankUsePlan.pdf

Impacted Wetland, Stream, or Buffer Functions

Describe the wetland or stream) functions that are expected to be lost or altered. The discussion can be divided into groups of wetland functions such as water quality, hydrologic, and habitat.

If a more detailed function description is available in other documents in the application package, this section should simply summarize the functions that will be affected and cite the more detailed document. Use the Washington State Wetland Rating System (Hruby 2014) and submit the rating forms and accompanying maps/drawings for all wetland impact projects requiring a Section 401 Water Quality Certification. Rating methods for both western and eastern WA are available at: http://www.ecy.wa.gov/programs/sea/wetlands/ratingsystems/index.html). Applicants may use other wetland function assessments, in addition to the rating system, at their discretion, but they should not substitute for the Rating System.

If the project will entirely eliminate a wetland, then assume that all functions will be lost. If a wetland will be partially filled or otherwise affected, discuss the extent to which existing functions will be lost. Include a discussion of the potential indirect and/or temporary impacts to the remaining wetland, if any.

Note: Fill or clearing in a wetland buffer may result in indirect wetland impacts that could also require compensatory mitigation. Even temporary clearing of forested or shrub areas in wetlands or buffers may have long-term indirect impacts to wetlands and may require mitigation. Also, functions are not evenly distributed throughout a wetland. For example, a wetland may be mostly forested with some disturbed emergent patches along the edges. If the project will only fill those emergent patches, then habitat functions may be less affected than if forested areas were eliminated. However, in this example, indirect impacts to habitat in the forested areas may result and should be accounted for.

Water Quality Functions – Briefly describe characteristics of wetlands relative to water quality functions such as water movement, vegetation extent as it relates to potential for slowing and filtering water (e.g., extent of grazing), extent of ponding, opportunity to improve water quality and so on. Describe how these functions will be affected by the project.

Hydrologic Functions – Briefly describe characteristics of wetlands relative to the ability and opportunity of the wetland to store water. Describe how these functions will be affected by the project.

Habitat Functions – Briefly describe characteristics of wetlands relative to habitat functions such as interspersion of habitats, corridor connectivity, plant species richness, buffer condition, and so on. Describe how these functions will be affected by the project.

Mitigation Site Selection Rationale

Confirm that the project is located within the KFMB Service area (see service area text definitions)

The impact site must be within the approved Service Area of the KFMB (See Figure 2). Note there are two described Service Areas – Lake Sammamish and Lake Washington. Contact a KFMB representative if you have questions about the KFMB Service Areas.

The Lake Sammamish Sub-basins/Creeks included in the Lake Sammamish Service Area are:

- Issaquah Creek Sub-basin: Issaquah Creek, Carey Creek, Holder Creek, McDonald Creek, Fifteenmile Creek, Tibbetts Creek
- Lake Sammamish Sub-basin: Laughing Jacobs Creek, Pine Lake Creek, Ebright Creek, George Davis Creek, Lewis Creek, Squibbs Creek, Vasa Creek
- Bear Creek Sub-basin: Bear Creek, Evans Creek, Rutherford Creek, Cottage Lake Creek, Mackey Creek, Colin Creek, Struve Creek
- Sammamish River Sub-basin: Derby Creek, Gold Creek, Woodin Creek
- Little Bear Creek Sub-basin: Little Bear Creek
- North Creek Sub-basin: North Creek, Silver Creek, Smokehouse Creek
- Swamp Creek Sub-basin: Swamp Creek, Scriber Creek (WDFW SalmonScape).

The Lake Washington Sub-basins/Creeks included in the Lake Washington Service Area are:

- Kelsey Creek Sub-basin: Kelsey Creek, Richards Creek (not including areas south of I-90)
- Lake Washington Sub-basin: Goff Creek, Yarrow Creek, Valley Creek, Forbes Creek, Juanita Creek, Lyon Creek, and McAleer Creek (WDFW SalmonScape)

Lake Washington Sub-basins/Creeks excluded from the Lake Washington Service Area are: portions of the Kelsey Creek Sub-basin located south of I-90 (including Richards Creek Sub-basin, Sunset Creek Sub-basin, East Creek Sub-basin, etc.), May Creek, Coal Creek, Thornton Creek, Ravenna Creek, and the Cedar River Watershed.

Use of Credits outside the Service Area - The Bank may be used on a case by case basis to compensate for permitted impacts falling geographically outside of the Service Areas, and/or beyond the allowable impact types specified, if approved by the agencies requiring mitigation and the Mitigation Bank Interagency Review Team. Typically, out-of-service-area impacts are only approved when purchasing mitigation bank credits would be practicable and environmentally preferable to other mitigation alternatives. Examples are projects that span multiple watershed basins such as transportation and utility corridors and pipelines, and settlement of enforcement actions.

Refer to this document for more guidance on preparing a Bank Use Plan - Interagency Review Team for Washington State. 2009. Using Credits from Wetland Mitigation Banks: Guidance to Applicants on the Submittal Contents for Bank Use Plans. Revised February 19. Available at: https://fortress.wa.gov/ecy/ezshare/sea/MitigationBanking/Templates/BankUsePlan.pdf

Below is general information that can be used to justify and/or describe the rationale for use of the Keller Farm Mitigation Bank within a Bank use Plan:

The _____Project Name_____ is located within the Mitigation Bank Service Area of the "Keller Farm Mitigation Bank" (KFMB), a 75-acre State and Federally certified mitigation bank project in Water Resource Inventory Area (WRIA) 8. The KFMB is located at the confluence of two regionally significant salmon bearing streams (Bear and Evans Creeks) in the City of Redmond.

The KFMB has undergone an extensive permitting and review process which involved input and direction from multiple agencies and reviewing groups. Based on work accomplished, credits have been approved and released for sale by the Interagency Review Team (IRT) co-chaired by the U.S. Army Corps of Engineers and the Washington State Department of Ecology. The KFMB restoration design, performance standards and monitoring plan is detailed in the bank's Mitigation Banking Instrument (MBI). This plan was prepared in consultation with the IRT and follows specific requirements of Chapter 173-700 WAC for Wetland Mitigation Banks. The following agencies and stakeholders participated in the development of the banking instrument:

- US Army Corps of Engineers, Seattle District
- US Environmental Protection Agency
- Washington State Department of Ecology
- National Marine Fisheries Service
- Washington Department of Fish and Wildlife
- Muckleshoot Indian Tribe Fisheries Division
- King County-WRIA 8 Technical Committee
- City of Redmond

The availability of mitigation credits from a large-scale mitigation bank project in WRIA-8 provides many benefits above and beyond traditional permittee-responsible mitigation. First the bank project was reviewed extensively by multiple agencies to ensure appropriate siting within the watershed, appropriate design and restoration approach as well as appropriate metrics for evaluating success. In the Lake Washington-Sammamish Watershed, there are relatively little restoration or mitigation opportunities available that provide meaningful functional lift of existing aquatic resources. There are limited mitigation opportunities when looking "on-site" versus locating mitigation in a more sustainable and effective part of the watershed.

Mitigation Bank Projects are highly regulated with multiple agencies overseeing their development and monitoring. Banks are situated in the landscape using criteria found in the joint guidance from the USACE and Washington Department of Ecology "Selecting Mitigation Sites Using a Watershed Approach" to targeting restoration actions in a WRIA or watershed. Banks are often very large, highly functioning restoration projects that restore a variety of wetland, riparian and associated upland habitat types, creating more complete and interconnected systems connected to habitat

corridors rather than habitat patches separated and fragmented by development. Banks are fully protected by a conservation easement which is funded in perpetuity through the establishment of an endowment fund and credits are only released when the bank has shown that it is meeting it's stated performance standards.

The USACE's 2008 Final Rule *"Compensatory Mitigation for Losses of Aquatic Resources"* establishes a preference for the use of certified mitigation banks to compensate for permitted impacts to aquatic resources:

> *"Since a mitigation bank must have an approved mitigation plan and other assurances in place before any of its credits can be used to offset permitted impacts, this rule establishes a preference for the use of mitigation bank credits, which reduces some of the risks and uncertainties associated with compensatory mitigation."*

The USACE rule goes on to read:

> *"when the permitted impacts are located within the service area of an approved mitigation bank, and the bank has the appropriate number and resource type of credits available, the permittee's compensatory mitigation requirements may be met by securing those credits from the sponsor" (33 CFR part 332.3b[2]).*
> Washington State's Mitigation Banking Rule provides the following support for the use and establishment of Mitigation Banks in Washington State:

"**WAC 173-700-100 Background and purpose.**
(1) The Wetlands Mitigation Banking Act, chapter 90.84 RCW, identifies wetland mitigation banking (banks) as an important regulatory tool for providing compensatory mitigation for unavoidable impacts to wetlands and declares it the policy of the state to support banking. The act directs the department of ecology (department) to adopt rules establishing a statewide process for certifying banks.
(2) The department anticipates that banks will provide compensatory mitigation in advance of unavoidable impacts to wetlands and will consolidate compensatory mitigation into larger contiguous areas for regionally significant ecological benefits.
(3) Banks prioritize restoration of wetland functions and as such should be complementary to the restoration of ecosystems and ecosystem processes as identified in state or locally adopted science-based watershed management plans.
(4) The purpose of this chapter is to encourage banking by providing an efficient, predictable statewide framework for the certification and operation of environmentally sound banks."

Local governments also implement land use regulations, which control the type and intensity of development within a given jurisdiction. Through guidance from Ecology, local governments have adopted critical are regulations supporting the use of mitigation banks and recognizing their unique ability to address watershed scale restoration objectives and limiting factors for

aquatic and critical areas. This is especially the case in more urban watersheds where very little meaningful mitigation actions may exist on-site or in the immediate sub-basin of a development project.

The Keller Farm Bank Site has been identified as a high priority stream and wetland restoration project in Water Resource Inventory Area (WRIA) 8 for the last thirty years, beginning with the Bear Creek Basin Plan in the 1980's. The bank site is identified as a 'Near Term Action' important to regional salmonid habitat restoration efforts as part of the Lake Washington/Cedar/Sammamish Salmon Conservation Plan for WRIA 8 adopted by NOAA Fisheries and implemented by local stakeholders to achieve Chinook salmon recovery consistent with the Endangered Species Act (Chinook Salmon Conservation Plan (CSCP), 2005; ESA 16 U.S.C. S 1531).

The KFMB is located at the confluence of two regionally significant, salmon-bearing streams, Bear Creek and Evans Creek. Another smaller stream, Perrigo Creek, flows adjacent to a portion of the western Bank boundary and will be rerouted and daylighted onto the bank site. The Bank design goals were developed as part of the Project Prospectus (Habitat Bank, 2015) and Basis of Design Report (Shannon and Wilson. Inc., 2018). The design goals are consistent with Ecology, Corps, and U.S. Environmental Protection agency guidelines for establishing mitigation bank goals and criteria, as well as with Bear Creek Basin restoration planning efforts and WRIA-8 restoration goals as established by the WRIA-8 Salmon Recovery Council. Wetland and habitat restoration goals on the Bank site were developed to address the limiting factors in the watershed related to the loss of wetland hydrology, the loss of wetland habitat and vegetation communities, and the alteration of topography affecting wetlands, floodplain, and stream habitat conditions. Implementation of the Keller Farm Mitigation Bank will result in substantial gains in aquatic ecosystem functions as compared to baseline conditions present on the site.

The site-specific goals and objectives for the KFMB include:

- Permanently protect ecosystem functions at the Bank by implementing the Bank Instrument and executing a conservation easement with permanent funding for site stewardship.

- Re-establish wetland hydrology and varying wetland hydroperiods across the site by disabling farm ditches, reconnecting Bear creek with its floodplain, and performing grading actions to re-establish wetland hydrology and riparian habitat across the Bank site.

- Create additional wetland habitat areas that support wetland-dependent organisms and anadromous fish species. Increase habitat structure and diversity on the Bank site over existing degraded conditions.

- Re-establish wetland vegetation and native plant communities across the site. Remove and control noxious and invasive plant species and reintroduce native vegetation to increase habitat complexity in the floodplain wetlands and adjacent upland areas. Plant native trees, shrubs, and herbaceous species to re-establish a mosaic of habitat communities within the Bank property.

- Improve access for aquatic organisms to floodplain wetland and aquatic areas. Enhance and create off-channel rearing and refuge habitat for salmonids within the floodplain streams and deeper backwater areas connected to Bear Creek.

- Reconnect Bear Creek to the floodplain and improve floodplain functions on the Bank site including attenuation of flood flows, reductions in peak flood flows, food web and organic material support and transport, and refuge habitat for fish and wildlife during flood events.

- Establish a connection point for the future relocation of Perrigo Creek through the adjacent parcel north of the Bank.

- Reestablish and rehabilitate stream channel habitat in the floodplain through grading and addition of large woody debris (LWD). Create pool habitat and increase channel habitat complexity.

- Increase shading and cover of streams through planting on the Bank site over existing conditions.

Specific creditable restoration actions at KFMB are shown below in Table 1:

Table 1. Creditable Restoration Actions at KFMB.

HABITAT TYPE (Action)	CREDITABLE ACRES	NON-CREDITABLE BUFFERS	NON-CREDITABLE EASEMENTS	TOTALS
Riparian Upland Forest (Enhancement)	6.7	5.1	0.1	11.9
Riparian Forest Wetland (Re-establishment)	17.5	1.5	0.1	19.1
Shrub-Scrub/Emergent Wetland Mix (Re-establishment)	28.7	2.8	0.5	32.0
Riparian Wetland Stream Complex (Rehabilitation)	3.9	0.3	0.1	4.3
Existing Wetland PFO/PSS Mix (Rehabilitation)	7.7	0.1	0.1	7.9
Subtotal	64.5	9.8	0.9	
Total	**75.2**			

In order to mitigate for the proposed discharge of fill material into ____, the applicant is proposing off-site mitigation from the KFMB. The KFMB has met all required performance standards applicable to the release of available credits under the terms of the Mitigation Bank Instrument (MBI). Given the size, scope and diversity of this bank located in an urban setting and its unique ability to restore both wetland area and functions as well as critical habitat for salmonids, the KFMB is the most suitable location for the proposed project's compensatory mitigation requirements.

For more information about the bank contact:
Habitat Bank LLC.
Zach Woodward
Project Manager
P.O. Box 354
Kirkland, WA 98033
Phone: (425) 205-0279
Email: Zachary.woodward@habitatbank.com
See also: www.habitatbank.com

Refer to this document for more guidance on preparing a Bank Use Plan - Interagency Review Team for Washington State. 2009. Using Credits from Wetland Mitigation Banks: Guidance to Applicants on the Submittal Contents for Bank Use Plans. Revised February 19. Available at: https://fortress.wa.gov/ecy/ezshare/sea/MitigationBanking/Templates/BankUsePlan.pdf

Confirmation of Mitigation Credit Availability

As of __DATE_____, the Keller Farm Mitigation Bank has approximately ___ mitigation credits available for immediate use. Mitigation credits are provided from the bank to an applicant's project using the suggested ratios in the table below, as approved by the U.S. Army Corps of Engineers (USACE) and the Washington State Department of Ecology (DOE).

Permanent Resource Impact	Credit to Impact Ratio
Wetland, Category I	Case by case
Wetland, Category II	1.2 to 1
Wetland, Category III	1.0 to 1
Wetland, Category IV	0.85 to 1
Critical Area Buffer	0.3 to 1
Stream	Case by case

Proof of the current number of available mitigation credits at the KFMB site can be confirmed by the approving agency(s) through the Interagency Review Team (IRT).

Contact:
Kate Thompson
Shorelands and Environmental Assistance Program
P.O. Box 47600
Olympia, WA 98504
(360) 407-6749
kate.thompson@ecy.wa.gov

Suzanne L. Anderson, PhD, PWS
Project Manager/Banking Lead
Seattle District U.S. Army Corps of Engineers
Regulatory Branch, CENWS-OD-RG
Mail Address: P.O. Box 3755
Seattle, WA 98124-3755
Building Location: 4735 East Marginal Way South
Seattle, WA 98134
Email: Suzanne.l.Anderson@usace.army.mil

Wetland/Stream Functions Provided at KFMB

This section should describe the functions expected to be provided at the Keller Farm Mitigation Bank. This information is available in the Mitigation Banking Instrument (MBI) or in other documents that have consolidated this information from the MBI (Ask a KFMB representative if you need more information). Describe how the functions and wetland types (e.g., freshwater/estuarine, HGM type, landscape setting) of the bank relate to the functions and types of wetlands that are expected to be affected by the project. This section should demonstrate how credits from the bank will provide adequate mitigation for project impacts, so be sure to provide appropriate detail. For ease of comparison, please discuss the bank's functions in the same way as the impact wetland's functions – grouped as water quality, hydrologic, and habitat functions.

Pages A1-A2, A13-A-22 of the MBI and B24-27 discuss the ecological goals existing and expected post-project functions to be provided by the KFMB. A suggested summary to include this section is:

The following is excerpted or paraphrased from the Keller Farm Mitigation Bank MBI:

The Keller Farm Mitigation Bank is located at the floodplain confluence of two regionally significant salmon bearing streams, Bear and Evans Creeks. The Bear Creek watershed is designated as a "Highest Restoration Watershed" by the City of Redmond. KFMB is a high priority wetland and stream restoration site important to regional salmonid habitat restoration efforts.

Historically, the bank site was a wetland and upland "mosaic" complex with forested, shrub, and herbaceous wetlands, beaver ponds, and tributary streams that flowed into Bear Creek. Two federally threatened salmonid species, Puget Sound Chinook and Steelhead, utilize Bear and Evans Creeks and their larger tributaries, as well as coho, sockeye, and coastal cutthroat, and numerous other non-salmonid fish species. The bank site is known to have been regularly used by Native Americans for fishing, camping and trading. The site was homesteaded in the 1880s and converted to agricultural use. It was extensively ditched, drained, grazed, tilled, and managed as a dairy farm through the 1980s. Very little remnant wetland area remained compared to historic conditions, and a network of linear ditches replaced the natural floodplain tributary streams to convey water off the site.

The KFMB includes wetland habitat areas that are classified as "depressional and riverine" under the HGM classification system and "palustrine and riverine" wetlands under the Cowardin classification system. Improvements to water quality, water quantity, and habitat functions within the re-established and rehabilitated wetland areas on the KFMB site will be documented and evaluated through the Bank's performance standards and monitoring reports, which allow credits to be generated and released for use by applicants. The improvement of existing and historic wetlands on the Bank site can be placed into two categories of restoration actions, per the joint agency guidance on compensatory mitigation found in *Wetland Mitigation in Washington State Part.1 Version 1* (Washington Department of Ecology, et al., 2006):

Wetland Re-establishment*: The manipulation of the physical, chemical, or biological characteristics of a site with the goal of returning natural or historic functions to a former wetland. Re-establishment results in rebuilding a former wetland and results in a gain in wetland acres and functions. Activities could include removing fill, plugging ditches, or breaking drain tiles.*

Wetland re-establishment actions at the Keller Farm Mitigation Bank include restoring wetland hydrology to historical wetland areas within the Bear Creek Floodplain that have been drained over the last 100 years by farm ditches.

Re-establishment activities for wetland hydrology include reconnecting historical wetlands and existing wetlands to floodplain streams by 1). disabling a series of deep drainage ditches and drainage tiles, 2). creating additional connection points between the floodplain wetlands and Bear Creek to increase the normal frequency of overbank flows 3). reconnecting and daylighting "Perrigo Creek" into the Bank Site to increase hydrologic inputs to the site, and 4.) providing habitat and space to account for beavers utilizing their historical habitat areas and creating additional floodplain inundation and saturation of soils.

These actions will reconnect wetland areas to their historical sources of hydrology and create highly functional wetland and riparian habitat types for juvenile salmonids, amphibians and other aquatic dependent organisms. Disabling ditches and reconnecting the high groundwater table to wetland areas on the bank site will re-saturate and inundate historical wetland areas and provide additional flood storage and attenuation of baseflows in Bear Creek. Shading these areas by creating shrub and forested wetland habitat communities will also reduce peak temperatures in aquatic areas and work to maintain the cool water input to Bear Creek from the bank site which is essential during the summer for Bear Creek and the Sammamish Basin for migrating anadromous fish.

Wetland Rehabilitation*: The manipulation of the physical, chemical, or biological characteristics of a site with the goal of repairing natural or historic functions [and processes] of a degraded wetland. Rehabilitation results in a gain in wetland function but does not result in a gain in wetland acres. Activities could involve breaching a dike to reconnect wetlands to a floodplain or returning tidal influence to a wetland.*

Wetland rehabilitation actions include restoring the natural wetland hydroperiod of existing wetlands through floodplain reconnection with Bear Creek and disabling of existing ditches, grading to create connectivity between existing wetlands and reestablished wetlands, and reestablishing native vegetation communities within the existing wetland areas.

Additionally, riparian uplands surrounding the re-established and rehabilitated wetland areas and streams will be enhanced through the planting of native trees and shrubs which will create interspersed terrestrial habitat, important for aquatic dependent wildlife as well as providing other improvements such as shading aquatic areas on the site and providing a source of organic material and large wood.

Restoration actions across the bank site will rehabilitate 7.9 acres of existing wetland habitat while re-establishing approximately 51.1 acres of forested, shrub and emergent wetlands. The existing 7,114 linear feet (1.7 acres) of ditched tributary streams will be rehabilitated and approximately 5,162 linear feet (2.6 acres) of stream channel will be added across the Bank site.

Water Quality Functions

All pre-existing wetlands provided a medium level of water quality functions (total water quality score of 6-7 points) and a low or medium site potential function for water quality improvement using the *Washington State Wetland Rating System for Western Washington* (Rating System). All wetlands are located within the floodplain of Bear Creek and are inundated during overbank flood events. However, lack of surface channel connections with Bear Creek or existing onsite ditches and limited extent of seasonal ponding during non-flood events restrict the site potential of existing wetlands to provide water quality functions. In addition, because the site was in agricultural use, pollutant filtering capability of vegetation in site wetlands was limited. All existing wetlands rate high for providing water quality improvement that is valuable to society because both Bear Creek adjacent to the Bank and the tributary Perrigo Creek that flows through the Bank site are listed on the State of Washington 303d list as impaired for water quality parameters. Perrigo Creek is impaired for temperature and a Total Maximum Daily Load (TMDL) has been established. Bear Creek is listed for bioassessment, dissolved oxygen, temperature, and bacteria and TMDLs have been established for the latter three parameters. Existing wetlands on the Bank site would gain significant functional lift in water quality from rehabilitation and enhancement actions associated with implementation of the Bank. In addition, a net increase of 51.1 acres of wetland and 2.6 acres of stream channel/wetland complex will result. Post-construction wetland and floodplain functions related to water quality, such as removing sediments, nutrients, metals, and toxic organics will significantly increase as native vegetation establishes.

The Bank's riparian restoration and stream plantings are an integral part of a regional effort to restore riparian conditions and functions and reduce temperatures in Bear Creek and the Sammamish River. Vegetating the banks of Bear Creek and the tributary floodplain streams within the Bank site with trees and shrubs will provide additional shading during the critical months in the summer and fall when adult salmon are migrating and spawning in the Bear Creek and Sammamish River systems. The Bank was designed so that during the summer and fall periods when water levels across the Bank site will be at their lowest levels, water will be confined to the riparian stream channel areas, rather than spreading out or ponding across the site which could warm surface waters. Riparian wetlands are not expected to have extended periods of standing water June through October. Additionally, floodplain streams will maintain their groundwater connection, providing a cold-water source in the streams and to Bear Creek.

Hydrologic Functions

All pre-existing wetlands on the Bank site provided a medium level of hydrologic functions (total hydrologic score of 7 points) using the Rating System.

Restoration actions at KFMB will result in improvement to site-specific wetland and floodplain hydrologic functions and watershed-scale hydrologic processes, including increased available flood storage volume, attenuation of flood flows, reductions in peak flood flows, and groundwater recharge.

Habitat Functions

All pre-existing wetlands on the Bank site provided a medium level of habitat functions (total habitat score of 6 points) using the Rating System. Plant communities were entirely emergent and dominated by non-native and invasive species, farmed, and lacked habitat complexity.

Overall habitat suitability for wetland-associated birds, mammals, amphibians, fish and invertebrates will improve over existing conditions because of: the net increase in acreage of wetland and aquatic area, improved access for aquatic organisms to floodplain wetland and aquatic areas, the increased variety of hydroperiods, the increase in vegetation species richness and habitat interspersion, the addition of habitat enhancement features such as large woody debris, and accessibility to contiguous habitat areas such as the adjacent WSDOT mitigation site and NPGA areas along Bear Creek.

The restoration of 7,114 linear feet of ditched tributary streams and addition of 5,162 linear feet of stream channel will increase available suitable habitat for salmonids and other fish species, including ESA-listed species, including additional off-channel rearing and refuge habitat within the floodplain streams and deeper backwater areas connected to Bear Creek.

Summary of Functional Improvements

Existing wetlands on the Bank site gain significant functional lift in water quality and habitat functions from rehabilitation and enhancement actions associated with implementation of the Bank. Hydrologic functions in existing wetlands would remain similar to pre-project conditions. Existing wetlands (7.9 ac) and re-established wetlands (63.3 ac) are anticipated to rate as Category II wetlands at maturity. For existing wetlands onsite, the Credit-Debit Method (*Calculating Credits and Debits for Compensatory Mitigation in Western Washington,* Hruby 2012*)* estimated that 14.2 acre-points would be generated for water quality functions and 7.9 acre-points would be generated for habitat functions with Bank implementation. Additionally, 500 water quality acre-points, 438 hydrology acre-points, and 438 habitat acre-points would be generated by re-establishing and rehabilitating approximately 63.3 acres of former wetlands on the site.

Post construction, the Bank site will consist of a mosaic of forested upland, forested, scrub/shrub, and emergent wetland, and stream channel habitat. The Bank will create new aquatic habitat for resident and anadromous fish species and improve existing habitat for the regionally important

salmonid populations that are present on the Bank site. A net increase of 51.1 acres of wetland and 2.6 acres of stream channel/wetland will result from Bank implementation.

Post-project conditions will provide numerous functional benefits over existing conditions including: allowing Bear Creek flows to infiltrate in wetland areas during a wider range of flow conditions; recharging the local groundwater aquifer; increasing floodplain wetland groundwater storage; providing cooling of groundwater through soil heat adsorption of surface waters; and delaying release of cooler groundwater to the floodplain streams later in the spring and summer when stream temperatures are highest. Plantings adjacent to Bear Creek and floodplain streams will also help moderate summer water temperatures, and re-established vegetation communities within the wetlands and riparian upland areas will increase habitat diversity and accessibility for aquatic dependent plants and animals. Enhanced floodplain connections with Bear Creek will be established that will increase the range of flow conditions where Bear Creek flows will contribute to hydrologic support of floodplain wetlands and streams. These connections will also allow fish access to the re-established wetlands and stream channels in the floodplain.

Wetland/Stream/Buffer Functions Not Mitigated at Mitigation Bank

Describe any functions that will be affected by the project that are not expected to be compensated for by the mitigation bank. This may include functions that are not provided by the bank or functions that a regulatory agency has determined must be replaced within or near the project area. Examples include stormwater treatment, groundwater recharge, flood storage, riparian habitat and others. If there are functions that will not be addressed by the mitigation bank, then explain how these functions will be otherwise mitigated by the project – cite other documents that describe this mitigation. This may include restoration of temporarily impacted areas as well. Alternatively, it is possible that a specific bank will not compensate for every function of the affected wetland but that there will be a net gain in other functions that justifies that loss. If so, explain the reasoning that lead to that conclusion.

This will be a project-specific discussion. See the following example Bank Use Plans for how this section was presented:

http://www.ci.lacenter.wa.us/city_departments/pdfs/2016_Highland_MitigationBankUsePlan.pdf

https://static.spokanecity.org/documents/projects/sia-wetland-removal/sia-wetland-removal-revised-wetland-mitigation-bank-use-plan.pdf

https://mountvernonwa.gov/DocumentCenter/View/10312/CheemaDivisionStWetlandMitgn-FINAL-1?bidId=

Refer to this document for more guidance on preparing a Bank Use Plan - Interagency Review Team for Washington State. 2009. Using Credits from Wetland Mitigation Banks: Guidance to Applicants on the Submittal Contents for Bank Use Plans. Revised February 19. Available at: https://fortress.wa.gov/ecy/ezshare/sea/MitigationBanking/Templates/BankUsePlan.pdf

Proposed Mitigation Credits

Show the mitigation ratios that were used to calculate the total number of bank credits needed to compensate for the project impacts. Include a summary table of project impacts and the number of credits required for each type of impact to aquatic or critical areas.

The KFMB credit to impact ratios are:

Permanent Resource Impact	Credit to Impact Ratio
Wetland, Category I	Case by case
Wetland, Category II	1.2 to 1
Wetland, Category III	1.0 to 1
Wetland, Category IV	0.85 to 1
Critical Area Buffer	0.3 to 1
Stream	Case by case

Credit Purchase or Transfer Timing

This section should note the anticipated timing of purchase or transfer of the credits and any other details regarding credit use that may be relevant to the permit process.

Suggested text is:

Project Applicant name will enter into a Purchase Agreement with Keller Farm Mitigation Bank (Habitat Bank, LLC) to purchase **xx** credits that would appropriately mitigate for the proposed project impacts. The anticipated timing of credit purchase and transfer is **date**, following permit issuance by the agencies with jurisdiction. Purchase of credits will be completed prior to the onset of any activities affecting impacted resources. Nothing in the Purchase Agreement shall be interpreted as permitting or construed to permit any activity that otherwise requires a federal, state and/or local permit. Proof of the credit purchase and transfer will be provided in the form a notification letter to the approving agencies and to the IRT co-chairs by the Bank Sponsor. Upon service of this notification, the mitigation requirement to purchase **xx** mitigation credits will be fully satisfied.

Citations

Compensatory Mitigation for Losses of Aquatic Resources. 2008. 33 C.F.R. §332.

Habitat Bank, LLC. 2019. Keller Farm Mitigation Bank Mitigation Banking Instrument. Available at: https://ecology.wa.gov/Water-Shorelines/Wetlands/Mitigation/Wetland-mitigation-banking/Mitigation-bank-projects/Keller-Farm

Interagency Review Team for Washington State. 2009. Using Credits from Wetland Mitigation Banks: Guidance to Applicants on the Submittal Contents for Bank Use Plans. Revised February 19. Available at: https://fortress.wa.gov/ecy/ezshare/sea/MitigationBanking/Templates/BankUsePlan.pdf

Hruby, T. 2012. Calculating Credits and Debits for Compensatory Mitigation in Wetlands of Western Washington, Final Report, March 2012. Washington State Department of Ecology publication #10-06-11. Available at: https://ecology.wa.gov/Water-Shorelines/Wetlands/Tools-resources/Credit-debit-method

Hruby, T. 2014. Washington State Wetland Rating System for Western Washington: 2014 Update - Effective January 2015. Publication No. 14-06-029. Available at: https://ecology.wa.gov/Water-Shorelines/Wetlands/Tools-resources/Rating-systems

Washington State Department of Ecology, U.S. Army Corps of Engineers Seattle District, and U.S. Environmental Protection Agency Region 10. March 2006. Wetland Mitigation in Washington State – Part 1: Agency Policies and Guidance (Version 1). Washington State Department of Ecology Publication #06-06-011a. Olympia, WA. Available at: https://ecology.wa.gov/Water-Shorelines/Wetlands/Mitigation/Interagency-guidance

Washington State Department of Ecology, U.S. Army Corps of Engineers Seattle District, and U.S. Environmental Protection Agency Region 10. March 2006. Wetland Mitigation in Washington State – Part 2: Developing Mitigation Plans (Version 1). Washington State Department of Ecology Publication #06-06-011b. Olympia, WA. Available at: https://ecology.wa.gov/Water-Shorelines/Wetlands/Mitigation/Interagency-guidance

APPENDIX F

Critical Areas Conceptual Mitigation Plans

Sheet W1.0: Existing Conditions Plan
Sheet W2.0: Proposed Site Plan, Impacts, & Mitigation Overview Plan
Sheet W3.0: Planting Plan
Sheet W3.1: Planting Plan
Sheet W3.2: Planting Plan
Sheet W3.3: Plant Schedule & Notes
Sheet W3.4: Planting Details
Sheet W4.0: Planting Specifications

Copyright © 2021 Talasaea Consultants, Inc.

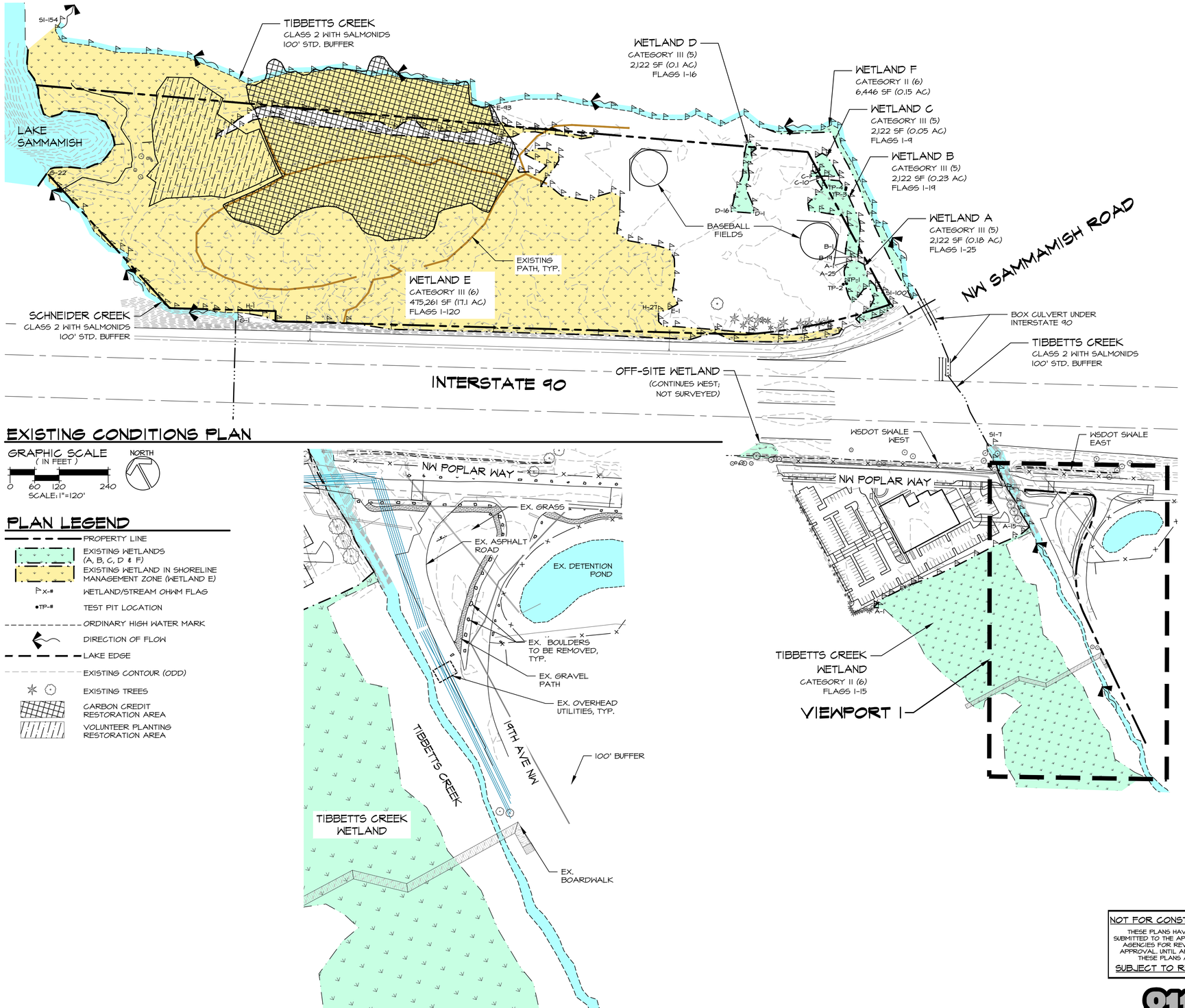

EXISTING CONDITIONS PLAN

GRAPHIC SCALE
(IN FEET)
0 60 120 240
SCALE: 1"=120'
NORTH

PLAN LEGEND

- PROPERTY LINE
- EXISTING WETLANDS (A, B, C, D & F)
- EXISTING WETLAND IN SHORELINE MANAGEMENT ZONE (WETLAND E)
- X-# WETLAND/STREAM OHWM FLAG
- TP-# TEST PIT LOCATION
- ORDINARY HIGH WATER MARK
- DIRECTION OF FLOW
- LAKE EDGE
- EXISTING CONTOUR (ODD)
- EXISTING TREES
- CARBON CREDIT RESTORATION AREA
- VOLUNTEER PLANTING RESTORATION AREA

VIEWPORT 1

GRAPHIC SCALE
(IN FEET)
0 30 60 120
SCALE: 1"=60'
NORTH

VICINITY MAP

NTS

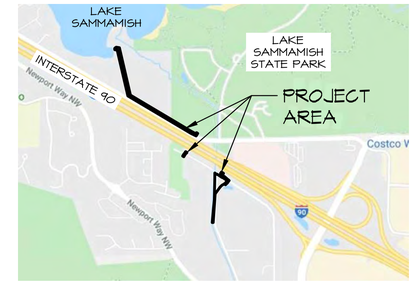

SOURCE: GOOGLE MAPS; WWW.MAPS.GOOGLE.COM (ACCESSED 10/7/2019)

NORTH

CONTACTS

APPLICANT/OWNER
NAME: KRISTI TRIPPLE
ADDRESS: 1545 NE GILMAN BOULEVARD, SUITE 1
ISSAQUAH, WA 98027
EMAIL: KRISTIT@ROWLEYPROPERTIES.COM

SURVEYOR
NAME: BUSH, ROED & HITCHINGS, INC.
ADDRESS: 2009 MINOR AVE E
SEATTLE, WA 98102-3513
PHONE: (206) 323-4144

ENGINEER
NAME: KPFF
ADDRESS: 1601 5TH AVE, SUITE 1600
SEATTLE, WA 98101
PHONE: (206) 622-5822
CONTACT: CHRIS BORZIO, PE
EMAIL: CHRIS.BORZIO@KPFF.COM

ENVIRONMENTAL CONSULTANT
NAME: TALASAEA CONSULTANTS, INC.
ADDRESS: 15020 BEAR CREEK RD. NE
WOODINVILLE, WA 98077
PHONE: (425) 861-7550
CONTACT: ANN OLSEN, SENIOR PROJECT MANAGER
AOLSEN@TALASAEA.COM
AARON ELLIG, ECOLOGIST
AELLIG@TALASAEA.COM

SHEET INDEX

SHEET NUMBER	SHEET TITLE
W1.0	EXISTING CONDITIONS PLAN
W2.0	PROPOSED SITE PLAN, IMPACTS & MITIGATION OVERVIEW PLAN
W3.0	PLANTING PLAN
W3.1	PLANTING PLAN
W3.2	PLANTING PLAN
W3.3	PLANT SCHEDULE & NOTES
W3.4	PLANTING DETAILS
W4.0	PLANTING SPECIFICATIONS

NOT FOR CONSTRUCTION
THESE PLANS HAVE BEEN SUBMITTED TO THE APPROPRIATE AGENCIES FOR REVIEW AND APPROVAL. UNTIL APPROVED, THESE PLANS ARE:
SUBJECT TO REVISION

811 Know what's below. Call before you dig.

NOTES

1. SURVEY PROVIDED BY BUSH, ROED, & HITCHINGS INC., 2009 MINOR AVE E SEATTLE, WA 98102-3513, (206) 323-4144.
2. SITE PLAN PROVIDED BY KPFF, 1601 5TH AVE SUITE 1600 SEATTLE, WA 98101 , (206) 622-5822.
3. SOURCE DRAWING WAS MODIFIED BY TALASAEA CONSULTANTS FOR VISUAL ENHANCEMENT.
4. THIS PLAN IS AN ATTACHMENT TO THE CRITICAL AREAS REPORT PREPARED BY TALASAEA CONSULTANTS IN APRIL, 2021.

kpff
1601 5th Avenue, Suite 1600
Seattle, WA 98101
206.622.5822
www.kpff.com

CONSULTANT
TALASAEA CONSULTANTS, INC.
Resource and Environmental Planning
15020 Bear Creek Road Northeast
Woodinville, Washington 98077
Bus (425) 861-7550 – Fax (425) 861-7549

PROJECT
HYLA CROSSING PUMPED STORMWATER DISCHARGE

ISSAQUAH, WA

OWNER
ROWLEY PROPERTIES
1595 NW GILMAN BLVD
ISSAQUAH WA, 98027

PROFESSIONAL SEAL

DESIGN TEAM	EP, AO
PRINCIPAL	BS
PROJECT MANAGER	AO
PROJECT ARCHITECT	EP
DRAWN BY	FH
CHECKED BY	AO

DRAWING SET DESCRIPTION
ASDP REVISION #1

REVISIONS

No.	DATE	DESCRIPTION
1	10/3/2019	**30% CD**
2	4/1/2020	**ASDP**
3	4/12/2021	**ASDP REVISION #1**

SHEET TITLE
EXISTING CONDITIONS PLAN

SHEET NUMBER
W1.0

ISSUE DATE
4/12/2021

Apr 09, 2021 – 12:20pm fhuynh Z:\DRAWING\1700-1799\TAL1775\Plans\TAL-1775 WP 2021-03.dwg
Xref Filename: \ XS-SUR-16 \ x-hcpsd-sv \ X-HCPSD-CON-STG \ x-hcpsd-sd PF \ X-HCPSD-SP \ x-hcpsd-sp-tul \ X-HCPSD-UT \ X-RPW-BLDG \ X-RPW-SD \ X-RPW-SP \ X-RPW-UT \ x-hcpsd-tbs \ X-HCPSD-TTLB-24X36 \ HCPSD-CONTOURS \ x-hcpsd-sd \ chase\

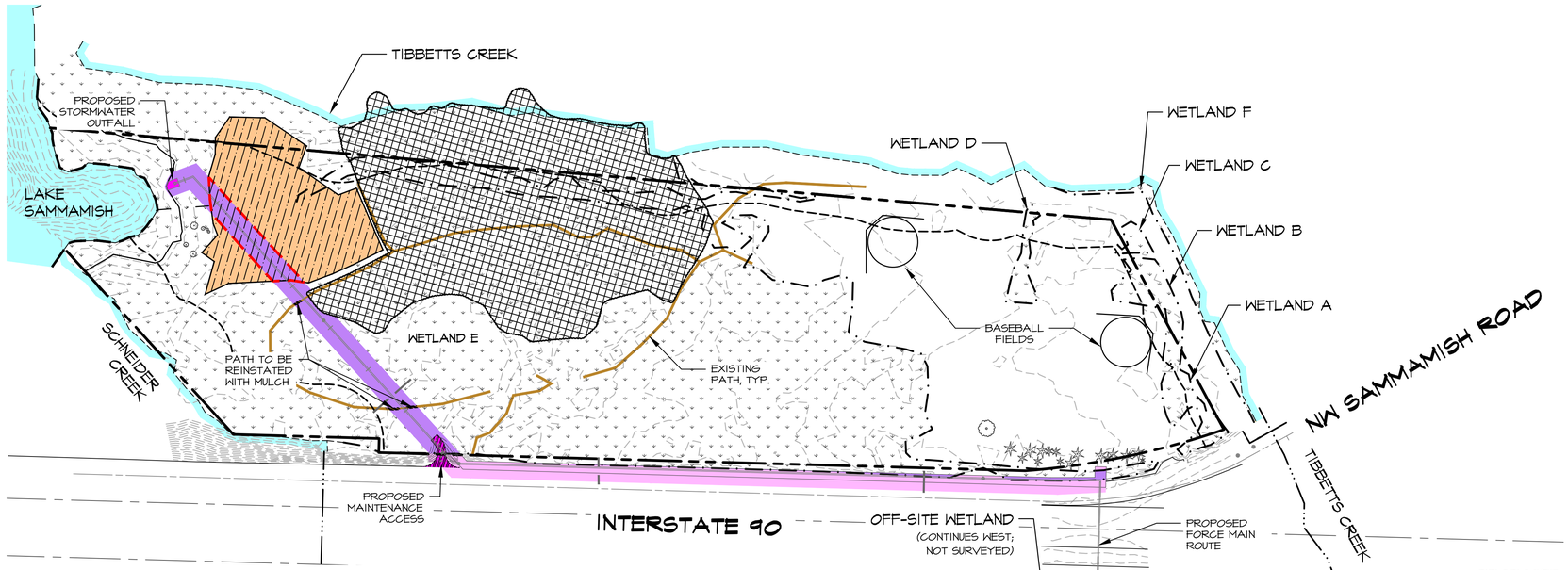

PROPOSED SITE PLAN, IMPACTS & MITIGATION OVERVIEW PLAN

GRAPHIC SCALE (IN FEET)
0 60 120 240
SCALE: 1"=120'
NORTH

PLAN LEGEND

- PROPERTY LINE
- EXISTING WETLANDS
- ORDINARY HIGH WATER MARK
- STREAM BUFFER
- DIRECTION OF FLOW
- LAKE EDGE
- EXISTING CONTOUR (ODD)
- POST-CONSTRUCTION BUFFER SPLIT-RAIL FENCE
- NGPA SIGN
- EXISTING TREES
- PROPOSED MAINTENANCE ACCESS (GRASSPAVE²)
- CARBON CREDIT RESTORATION AREA
- VOLUNTEER PLANTING RESTORATION AREA
- WILLOW STAKES 6'-12' O.C. (DENSITY VARIES)

IMPACTS LEGEND

TEMPORARY CONSTRUCTION IMPACTS - WETLAND E	28,974 SF
TEMPORARY CONSTRUCTION IMPACTS - WETLAND E BUFFER	33,792 SF
TOTAL TEMPORARY CONSTRUCTION IMPACTS	62,766 SF (1.44 AC)
PERMANENT WETLAND IMPACTS * (MAINTENANCE ACCESS AND STORMWATER OUTFALL)	805 SF
PERMANENT WETLAND BUFFER IMPACTS * (MAINTENANCE ACCESS)	632 SF
TOTAL PERMANENT CONSTRUCTION IMPACTS *	1,437 SF (0.03 AC)

* MITIGATION REQUIRED FOR THE PERMANENT IMPACTS OF WETLAND E AND ITS BUFFER WILL BE PROVIDED BY PURCHASING CREDITS AT KFMB USING THE CREDITS PER UNIT IMPACT RATIOS PROVIDED IN THE KFMB'S MITIGATION BANKING INSTRUMENT (SEE CRITICAL AREAS REPORT)

MITIGATION LEGEND

RESTORATION OF TEMPORARY CONSTRUCTION IMPACTS - WETLAND E	28,974 SF
RESTORATION OF TEMPORARY CONSTRUCTION IMPACTS - WETLAND E BUFFER	33,792 SF
TOTAL RESTORATION OF TEMPORARY CONSTRUCTION IMPACTS	62,766 SF (1.44 AC)
RESTORATION OF TIBBETTS CREEK BUFFER (PER EXHIBIT 16 HYLA CROSSING MSP/BSP 97-01 NOTED IN APPENDIX J, CRITICAL AREAS, EXHIBIT J-1, DEVELOPER'S AGREEMENT.)	26,154 SF (0.6 AC)
VOLUNTEER RESTORATION AREA DISTURBED BY CONSTRUCTION	8,237 SF
WETLAND ENHANCEMENT (REPLACING 684 WILLOWS WITHIN VOLUNTEER RESTORATION AREA) (8,237 SF X 0.0277 = 228 X 3 = 684)	

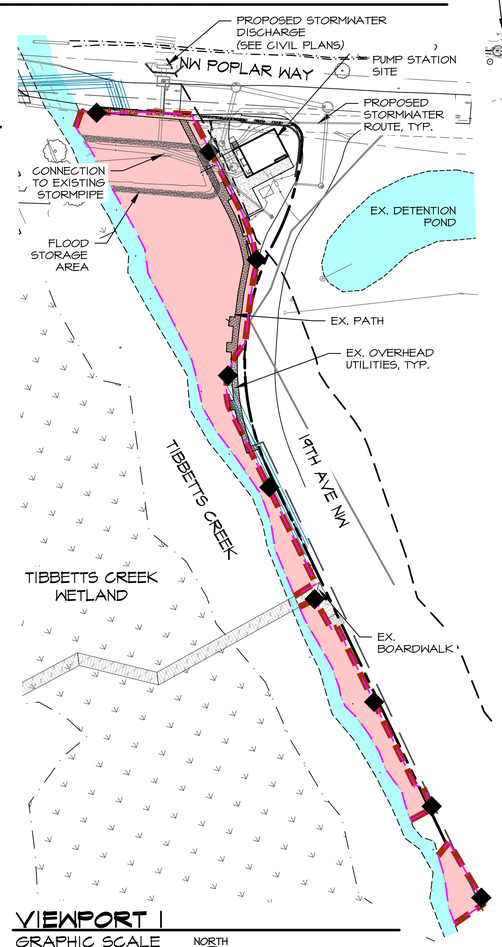

VIEWPORT 1

GRAPHIC SCALE (IN FEET)
0 30 60 120
SCALE: 1"=60'
NORTH

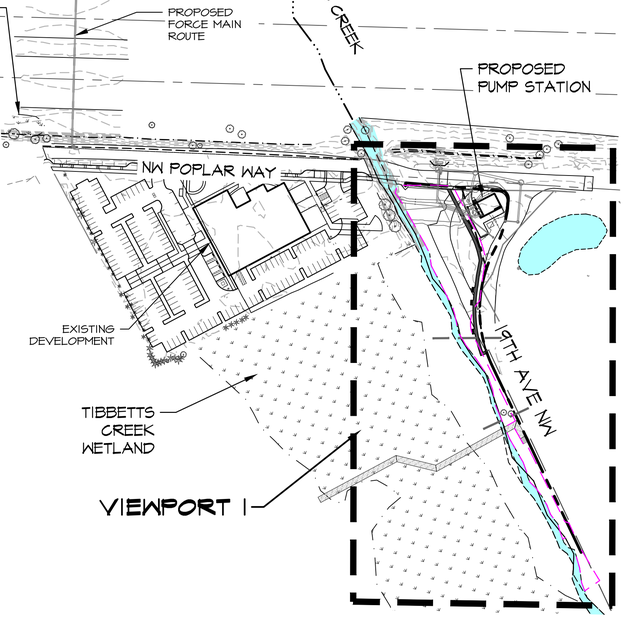

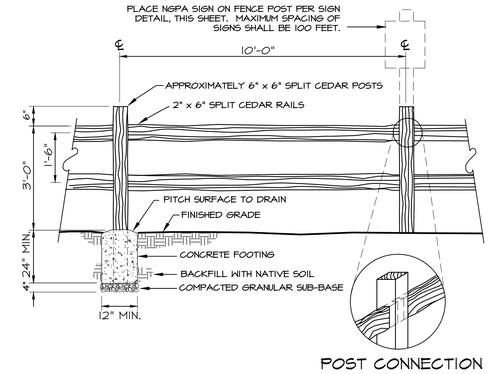

1 SPLIT 2-RAIL FENCE DETAIL

N.T.S.

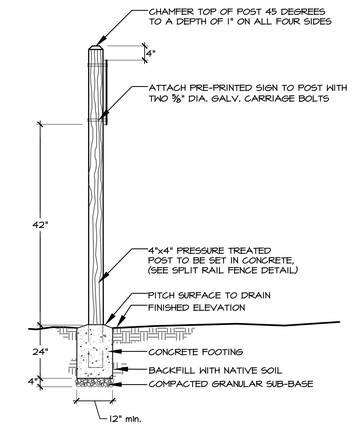

2 NGPA SIGN DETAIL TYP.

N.T.S.

NOT FOR CONSTRUCTION

THESE PLANS HAVE BEEN SUBMITTED TO THE APPROPRIATE AGENCIES FOR REVIEW AND APPROVAL. UNTIL APPROVED, THESE PLANS ARE:

SUBJECT TO REVISION

811 Know what's below. Call before you dig.

NOTES

1. SURVEY PROVIDED BY BUSH, ROED, & HITCHINGS INC., 2009 MINOR AVE E SEATTLE, WA 98102-3513, (206) 323-4144.
2. SITE PLAN PROVIDED BY KPFF, 1601 5TH AVE SUITE 1600 SEATTLE, WA 98101 , (206) 622-5822.
3. SOURCE DRAWING WAS MODIFIED BY TALASAEA CONSULTANTS FOR VISUAL ENHANCEMENT.
4. THIS PLAN IS AN ATTACHMENT TO THE CRITICAL AREAS REPORT PREPARED BY TALASAEA CONSULTANTS IN APRIL, 2021.

kpff
1601 5th Avenue, Suite 1600
Seattle, WA 98101
206.622.5822
www.kpff.com

CONSULTANT
TALASAEA CONSULTANTS, INC.
Resource and Environmental Planning
15020 Bear Creek Road Northeast
Woodinville, Washington 98077
Bus (425) 861-7550 – Fax (425) 861-7549

PROJECT
HYLA CROSSING PUMPED STORMWATER DISCHARGE
ISSAQUAH, WA

OWNER
ROWLEY PROPERTIES
1595 NW GILMAN BLVD
ISSAQUAH WA, 98027

PROFESSIONAL SEAL

DESIGN TEAM	EP, AO
PRINCIPAL	BS
PROJECT MANAGER	AO
PROJECT ARCHITECT	EP
DRAWN BY	FH
CHECKED BY	AO

DRAWING SET DESCRIPTION
ASDP REVISION #1

REVISIONS

No.	DATE	DESCRIPTION
1	10/3/2019	30% CD
2	4/1/2020	ASDP
3	4/12/2021	ASDP REVISION #1

SHEET TITLE
SITE PLAN, IMPACTS & MITIGATION OVERVIEW PLAN

SHEET NUMBER
W2.0

ISSUE DATE
4/12/2021

Apr 09, 2021 – 1:03pm rhuynh Z:\DRAWING\1700-1799\TAL1775\Plans\TAL-1775 WP 2021-03.dwg
Xref Filename: \ XS-SUR-16 \ x-hcpsd-sv \ X-HCPSD-CON-STG \ x-hcpsd-sd PF \ X-HCPSD-SP \ x-hcpsd-sp-tul \ X-HCPSD-UT \ X-RPW-BLDG \ X-RPW-SD \ X-RPW-SP \ X-RPW-UT \ x-hcpsd-tbb \ X-HCPSD-TTLB-24X36 \ HCPSD-CONTOURS \ x-hcpsd-sd \ chose\

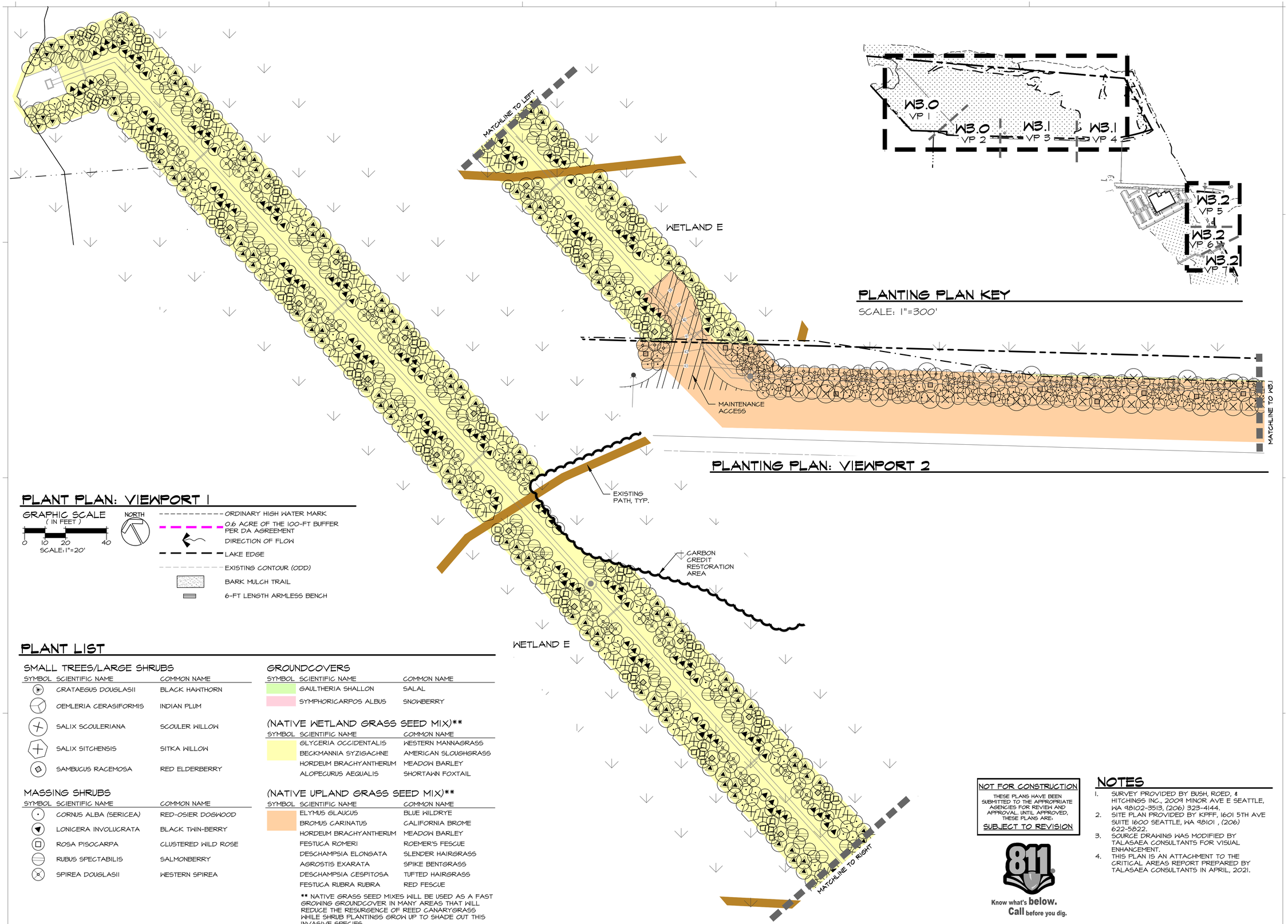

PLANTING PLAN KEY

SCALE: 1"=300'

PLANTING PLAN: VIEWPORT 2

PLANT PLAN: VIEWPORT 1

GRAPHIC SCALE (IN FEET)
0 10 20 40
SCALE: 1"=20'

NORTH

- ORDINARY HIGH WATER MARK
- 0.6 ACRE OF THE 100-FT BUFFER PER DA AGREEMENT
- DIRECTION OF FLOW
- LAKE EDGE
- EXISTING CONTOUR (ODD)
- BARK MULCH TRAIL
- 6-FT LENGTH ARMLESS BENCH

PLANT LIST

SMALL TREES/LARGE SHRUBS

SYMBOL	SCIENTIFIC NAME	COMMON NAME
	CRATAEGUS DOUGLASII	BLACK HAWTHORN
	OEMLERIA CERASIFORMIS	INDIAN PLUM
	SALIX SCOULERIANA	SCOULER WILLOW
	SALIX SITCHENSIS	SITKA WILLOW
	SAMBUCUS RACEMOSA	RED ELDERBERRY

MASSING SHRUBS

SYMBOL	SCIENTIFIC NAME	COMMON NAME
	CORNUS ALBA (SERICEA)	RED-OSIER DOGWOOD
	LONICERA INVOLUCRATA	BLACK TWIN-BERRY
	ROSA PISOCARPA	CLUSTERED WILD ROSE
	RUBUS SPECTABILIS	SALMONBERRY
	SPIREA DOUGLASII	WESTERN SPIREA

GROUNDCOVERS

SYMBOL	SCIENTIFIC NAME	COMMON NAME
	GAULTHERIA SHALLON	SALAL
	SYMPHORICARPOS ALBUS	SNOWBERRY

(NATIVE WETLAND GRASS SEED MIX)**

SYMBOL	SCIENTIFIC NAME	COMMON NAME
	GLYCERIA OCCIDENTALIS	WESTERN MANNAGRASS
	BECKMANNIA SYZIGACHNE	AMERICAN SLOUGHGRASS
	HORDEUM BRACHYANTHERUM	MEADOW BARLEY
	ALOPECURUS AEQUALIS	SHORTAWN FOXTAIL

(NATIVE UPLAND GRASS SEED MIX)**

SYMBOL	SCIENTIFIC NAME	COMMON NAME
	ELYMUS GLAUCUS	BLUE WILDRYE
	BROMUS CARINATUS	CALIFORNIA BROME
	HORDEUM BRACHYANTHERUM	MEADOW BARLEY
	FESTUCA ROMERI	ROEMER'S FESCUE
	DESCHAMPSIA ELONGATA	SLENDER HAIRGRASS
	AGROSTIS EXARATA	SPIKE BENTGRASS
	DESCHAMPSIA CESPITOSA	TUFTED HAIRGRASS
	FESTUCA RUBRA RUBRA	RED FESCUE

** NATIVE GRASS SEED MIXES WILL BE USED AS A FAST GROWING GROUNDCOVER IN MANY AREAS THAT WILL REDUCE THE RESURGENCE OF REED CANARYGRASS WHILE SHRUB PLANTINGS GROW UP TO SHADE OUT THIS INVASIVE SPECIES.

NOT FOR CONSTRUCTION

THESE PLANS HAVE BEEN SUBMITTED TO THE APPROPRIATE AGENCIES FOR REVIEW AND APPROVAL. UNTIL APPROVED, THESE PLANS ARE:

SUBJECT TO REVISION

811 Know what's below. Call before you dig.

NOTES

1. SURVEY PROVIDED BY BUSH, ROED, & HITCHINGS INC., 2009 MINOR AVE E SEATTLE, WA 98102-3513, (206) 323-4144.
2. SITE PLAN PROVIDED BY KPFF, 1601 5TH AVE SUITE 1600 SEATTLE, WA 98101 , (206) 622-5822.
3. SOURCE DRAWING WAS MODIFIED BY TALASAEA CONSULTANTS FOR VISUAL ENHANCEMENT.
4. THIS PLAN IS AN ATTACHMENT TO THE CRITICAL AREAS REPORT PREPARED BY TALASAEA CONSULTANTS IN APRIL, 2021.

kpff
1601 5th Avenue, Suite 1600
Seattle, WA 98101
206.622.5822
www.kpff.com

CONSULTANT
TALASAEA CONSULTANTS, INC.
Resource and Environmental Planning
15020 Bear Creek Road Northeast
Woodinville, Washington 98077
Bus (425) 861-7550 – Fax (425) 861-7549

PROJECT
HYLA CROSSING PUMPED STORMWATER DISCHARGE

ISSAQUAH, WA

OWNER
ROWLEY PROPERTIES
1595 NW GILMAN BLVD
ISSAQUAH WA, 98027

PROFESSIONAL SEAL

DESIGN TEAM	EP, AO
PRINCIPAL	BS
PROJECT MANAGER	AO
PROJECT ARCHITECT	EP
DRAWN BY	FH
CHECKED BY	AO

DRAWING SET DESCRIPTION
ASDP REVISION #1

REVISIONS

No.	DATE	DESCRIPTION
1	10/3/2019	**30% CD**
2	4/1/2020	**ASDP**
3	4/12/2021	**ASDP REVISION #1**

SHEET TITLE
PLANTING PLAN

SHEET NUMBER
W3.0

ISSUE DATE
4/12/2021

Apr 09, 2021 - 4:10pm ftuyeh Z:\DRAWING\1700-1799\TAL1775\Plans\TAL-1775 WP 2021-03.dwg
Xref Filename: \ XS-SUR-16 \ x-hcpsd-sv \ X-HCPSD-CON-STG \ x-hcpsd-sd PP \ X-HCPSD-SP \ x-hcpsd-sp-fal \ X-HCPSD-UT \ X-RPW-BLDG \ X-RPW-SD \ X-RPW-SP \ X-RPW-UT \ x-hcpsd-tbb \ X-HCPSD-TTLB-24X36 \ HCPSD-CONTOURS \ x-hcpsd-sd \ chase\

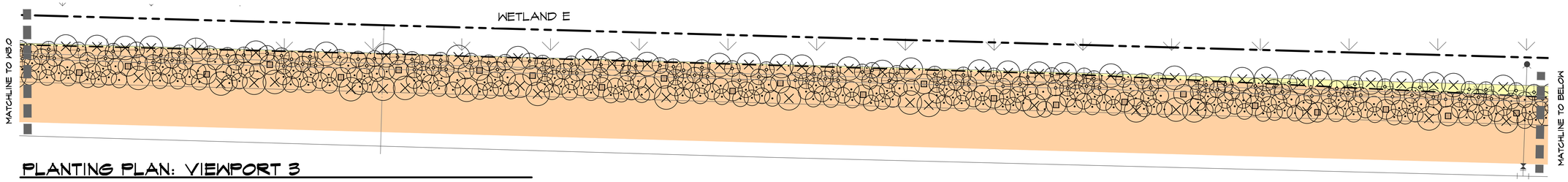

PLANTING PLAN: VIEWPORT 3

GRAPHIC SCALE (IN FEET)
0 10 20 40
SCALE: 1"=20'

NORTH

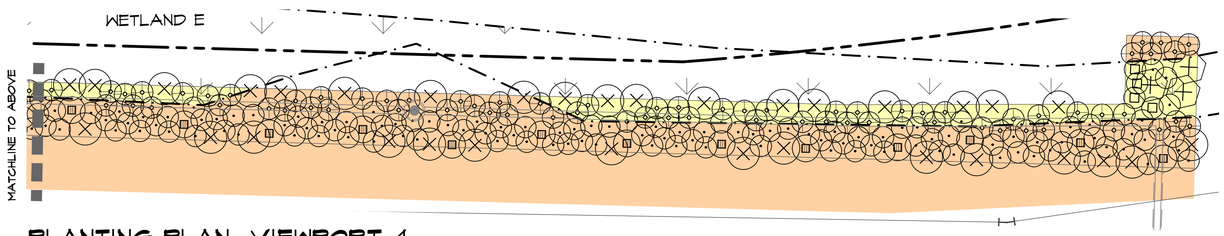

PLANTING PLAN: VIEWPORT 4

SCALE: 1"=20'

- ORDINARY HIGH WATER MARK
- 0.6 ACRE OF THE 100-FT BUFFER PER DA AGREEMENT
- DIRECTION OF FLOW
- LAKE EDGE
- EXISTING CONTOUR (ODD)
- BARK MULCH TRAIL
- 6-FT LENGTH ARMLESS BENCH

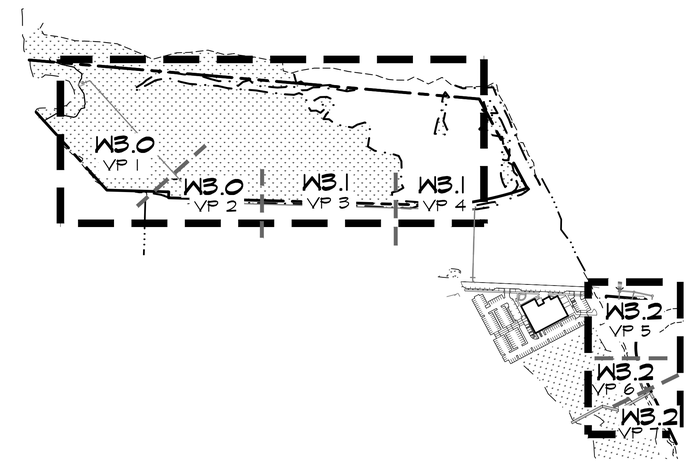

PLANTING PLAN KEY

SCALE: 1"=300'

PLANT LIST

SMALL TREES/LARGE SHRUBS

SYMBOL	SCIENTIFIC NAME	COMMON NAME
	CRATAEGUS DOUGLASII	BLACK HAWTHORN
	OEMLERIA CERASIFORMIS	INDIAN PLUM
	SALIX SCOULERIANA	SCOULER WILLOW
	SALIX SITCHENSIS	SITKA WILLOW
	SAMBUCUS RACEMOSA	RED ELDERBERRY

MASSING SHRUBS

SYMBOL	SCIENTIFIC NAME	COMMON NAME
	CORNUS ALBA (SERICEA)	RED-OSIER DOGWOOD
	LONICERA INVOLUCRATA	BLACK TWIN-BERRY
	ROSA PISOCARPA	CLUSTERED WILD ROSE
	RUBUS SPECTABILIS	SALMONBERRY
	SPIREA DOUGLASII	WESTERN SPIREA

GROUNDCOVERS

SYMBOL	SCIENTIFIC NAME	COMMON NAME
	GAULTHERIA SHALLON	SALAL
	SYMPHORICARPOS ALBUS	SNOWBERRY

(NATIVE WETLAND GRASS SEED MIX)**

SYMBOL	SCIENTIFIC NAME	COMMON NAME
	GLYCERIA OCCIDENTALIS	WESTERN MANNAGRASS
	BECKMANNIA SYZIGACHNE	AMERICAN SLOUGHGRASS
	HORDEUM BRACHYANTHERUM	MEADOW BARLEY
	ALOPECURUS AEQUALIS	SHORTAWN FOXTAIL

(NATIVE UPLAND GRASS SEED MIX)**

SYMBOL	SCIENTIFIC NAME	COMMON NAME
	ELYMUS GLAUCUS	BLUE WILDRYE
	BROMUS CARINATUS	CALIFORNIA BROME
	HORDEUM BRACHYANTHERUM	MEADOW BARLEY
	FESTUCA ROMERI	ROEMER'S FESCUE
	DESCHAMPSIA ELONGATA	SLENDER HAIRGRASS
	AGROSTIS EXARATA	SPIKE BENTGRASS
	DESCHAMPSIA CESPITOSA	TUFTED HAIRGRASS
	FESTUCA RUBRA RUBRA	RED FESCUE

** NATIVE GRASS SEED MIXES WILL BE USED AS A FAST GROWING GROUNDCOVER IN MANY AREAS THAT WILL REDUCE THE RESURGENCE OF REED CANARYGRASS WHILE SHRUB PLANTINGS GROW UP TO SHADE OUT THIS INVASIVE SPECIES.

NOT FOR CONSTRUCTION

THESE PLANS HAVE BEEN SUBMITTED TO THE APPROPRIATE AGENCIES FOR REVIEW AND APPROVAL. UNTIL APPROVED, THESE PLANS ARE:

SUBJECT TO REVISION

811 Know what's below. Call before you dig.

NOTES

1. SURVEY PROVIDED BY BUSH, RODED, & HITCHINGS INC., 2009 MINOR AVE E SEATTLE, WA 98102-3513, (206) 323-4144.
2. SITE PLAN PROVIDED BY KPFF, 1601 5TH AVE SUITE 1600 SEATTLE, WA 98101 , (206) 622-5822.
3. SOURCE DRAWING WAS MODIFIED BY TALASAEA CONSULTANTS FOR VISUAL ENHANCEMENT.
4. THIS PLAN IS AN ATTACHMENT TO THE CRITICAL AREAS REPORT PREPARED BY TALASAEA CONSULTANTS IN APRIL, 2021.

kpff
1601 5th Avenue, Suite 1600
Seattle, WA 98101
206.622.5822
www.kpff.com

CONSULTANT
TALASAEA CONSULTANTS, INC.
Resource and Environmental Planning
15020 Bear Creek Road Northeast
Woodinville, Washington 98077
Bus (425) 861-7550 - Fax (425) 861-7549

PROJECT
HYLA CROSSING PUMPED STORMWATER DISCHARGE

ISSAQUAH, WA

OWNER
ROWLEY PROPERTIES
1595 NW GILMAN BLVD
ISSAQUAH WA, 98027

PROFESSIONAL SEAL

DESIGN TEAM	EP, AO
PRINCIPAL	BS
PROJECT MANAGER	AO
PROJECT ARCHITECT	EP
DRAWN BY	FH
CHECKED BY	AO

DRAWING SET DESCRIPTION
ASDP REVISION #1

REVISIONS

No.	DATE	DESCRIPTION
1	10/3/2019	**30% CD**
2	4/1/2020	**ASDP**
3	4/12/2021	**ASDP REVISION #1**

SHEET TITLE
PLANTING PLAN

SHEET NUMBER
W3.1

ISSUE DATE
4/12/2021

Apr 09, 2021 - 12:09pm fhuynh Z:\DRAWING\1700-1799\TAL1775\Plans\TAL-1775 WP 2021-03.dwg
Xref Filename: \ XS-SUR-16 \ x-hcpsd-av \ X-HCPSD-CON-STG \ x-hcpsd-sd PF \ X-HCPSD-SP \ x-hcpsd-sp-fut \ X-HCPSD-UT \ X-RPW-BLDG \ X-RPW-SD \ X-RPW-SP \ X-RPW-UT \ x-hcpsd-tbb \ X-HCPSD-TTLB-24X36 \ HCPSD-CONTOURS \ x-hcpsd-sd \ chase\

PLANTING PLAN: VIEWPORT 5

GRAPHIC SCALE (IN FEET) 0 10 20 40
SCALE: 1"=20'
NORTH

- PROPERTY LINE
- EXISTING WETLANDS (A, B, C, D & F)
- ORDINARY HIGH WATER MARK
- 0.6 ACRE OF THE 100-FT BUFFER PER DA AGREEMENT
- DIRECTION OF FLOW
- LAKE EDGE
- EXISTING CONTOUR (ODD)
- BARK MULCH TRAIL
- 6-FT LENGTH ARMLESS BENCH
- EXISTING TREES

PLANTING PLAN: VIEWPORT 6

SCALE: 1"=20'

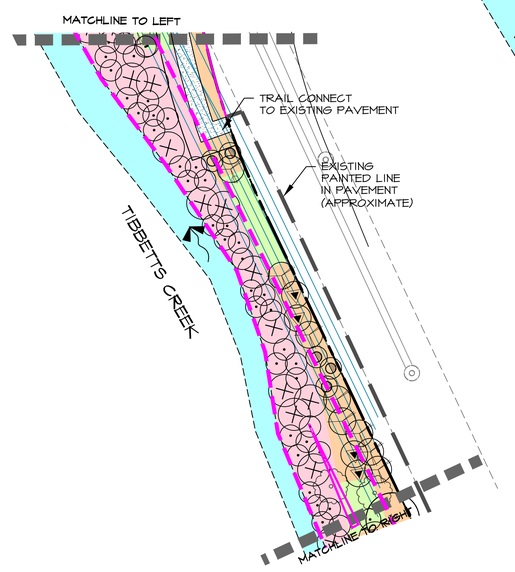

PLANTING PLAN: VIEWPORT 7

SCALE: 1"=20'

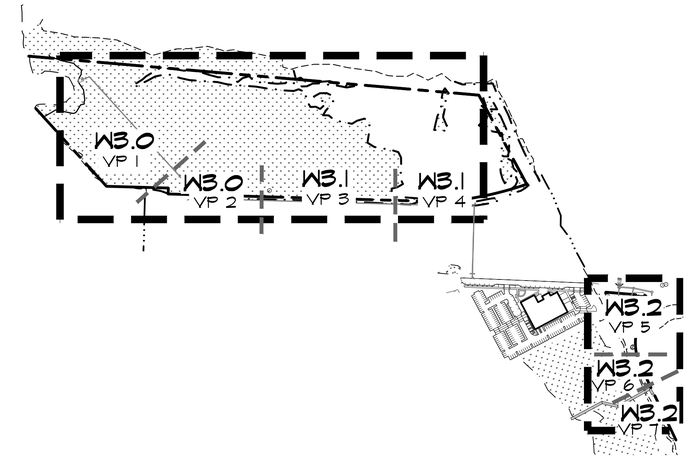

PLANTING PLAN KEY

SCALE: 1"=300'

PLANT LIST

LARGE TREES

SCIENTIFIC NAME	COMMON NAME
PSEUDOTSUGA MENZIEII	DOUGLAS FIR

SMALL TREES/LARGE SHRUBS

SCIENTIFIC NAME	COMMON NAME
ACER CIRCINATUM	VINE MAPLE
AMELANCHIER ALNIFOLIA	SERVICEBERRY
CRATAEGUS DOUGLASII	BLACK HAWTHORN
OEMLERIA CERASIFORMIS	INDIAN PLUM
SALIX SCOULERIANA	SCOULER WILLOW
SALIX SITCHENSIS	SITKA WILLOW
SAMBUCUS RACEMOSA	RED ELDERBERRY

MASSING SHRUBS

SCIENTIFIC NAME	COMMON NAME
CORNUS ALBA (SERICEA)	RED-OSIER DOGWOOD
LONICERA INVOLUCRATA	BLACK TWIN-BERRY
RUBUS PARVIFLORUS	THIMBLEBERRY
ROSA PISOCARPA	CLUSTERED WILD ROSE
RUBUS SPECTABILIS	SALMONBERRY
SPIREA DOUGLASII	WESTERN SPIREA

GROUNDCOVERS

SYMBOL	SCIENTIFIC NAME	COMMON NAME
	GAULTHERIA SHALLON	SALAL
	SYMPHORICARPOS ALBUS	SNOWBERRY

(NATIVE WETLAND GRASS SEED MIX)**

SYMBOL	SCIENTIFIC NAME	COMMON NAME
	GLYCERIA OCCIDENTALIS	WESTERN MANNAGRASS
	BECKMANNIA SYZIGACHNE	AMERICAN SLOUGHGRASS
	HORDEUM BRACHYANTHERUM	MEADOW BARLEY
	ALOPECURUS AEQUALIS	SHORTAWN FOXTAIL

(NATIVE UPLAND GRASS SEED MIX)**

SYMBOL	SCIENTIFIC NAME	COMMON NAME
	ELYMUS GLAUCUS	BLUE WILDRYE
	BROMUS CARINATUS	CALIFORNIA BROME
	HORDEUM BRACHYANTHERUM	MEADOW BARLEY
	FESTUCA ROMERI	ROEMER'S FESCUE
	DESCHAMPSIA ELONGATA	SLENDER HAIRGRASS
	AGROSTIS EXARATA	SPIKE BENTGRASS
	DESCHAMPSIA CESPITOSA	TUFTED HAIRGRASS
	FESTUCA RUBRA RUBRA	RED FESCUE

** NATIVE GRASS SEED MIXES WILL BE USED AS A FAST GROWING GROUNDCOVER IN MANY AREAS THAT WILL REDUCE THE RESURGENCE OF REED CANARYGRASS WHILE SHRUB PLANTINGS GROW UP TO SHADE OUT THIS INVASIVE SPECIES.

NOT FOR CONSTRUCTION

THESE PLANS HAVE BEEN SUBMITTED TO THE APPROPRIATE AGENCIES FOR REVIEW AND APPROVAL. UNTIL APPROVED, THESE PLANS ARE:

SUBJECT TO REVISION

811 Know what's below. Call before you dig.

NOTES

1. SURVEY PROVIDED BY BUSH, ROED, & HITCHINGS INC., 2009 MINOR AVE E SEATTLE, WA 98102-3513, (206) 323-4144.
2. SITE PLAN PROVIDED BY KPFF, 1601 5TH AVE SUITE 1600 SEATTLE, WA 98101 , (206) 622-5822.
3. SOURCE DRAWING WAS MODIFIED BY TALASAEA CONSULTANTS FOR VISUAL ENHANCEMENT.
4. THIS PLAN IS AN ATTACHMENT TO THE CRITICAL AREAS REPORT PREPARED BY TALASAEA CONSULTANTS IN APRIL, 2021.

kpff
1601 5th Avenue, Suite 1600
Seattle, WA 98101
206.622.5822
www.kpff.com

CONSULTANT
TALASAEA CONSULTANTS, INC.
Resource and Environmental Planning
15020 Bear Creek Road Northeast
Woodinville, Washington 98077
Bus (425) 861-7550 – Fax (425) 861-7549

PROJECT
HYLA CROSSING PUMPED STORMWATER DISCHARGE
ISSAQUAH, WA

OWNER
ROWLEY PROPERTIES
1595 NW GILMAN BLVD
ISSAQUAH WA, 98027

PROFESSIONAL SEAL

DESIGN TEAM	EP, AO
PRINCIPAL	BS
PROJECT MANAGER	AO
PROJECT ARCHITECT	EP
DRAWN BY	FH
CHECKED BY	AO

DRAWING SET DESCRIPTION
ASDP REVISION #1

REVISIONS

No.	DATE	DESCRIPTION
1	10/3/2019	30% CD
2	4/1/2020	ASDP
3	4/12/2021	ASDP REVISION #1

SHEET TITLE
PLANTING PLAN

SHEET NUMBER
W3.2

ISSUE DATE
4/12/2021

Apr 09, 2021 – 4:24pm fhuynh Z:\DRAWING\1700-1799\TAL1775\Plans\TAL-1775 WP 2021-03.dwg
Xref Filename: \ X8-SUR-16 \ x-hcpsd-sv \ X-HCPSD-CON-STG \ x-hcpsd-sd PF \ X-HCPSD-SP \ x-hcpsd-sp-fal \ X-HCPSD-UT \ X-RPW-BLDG \ X-RPW-SD \ X-RPW-SP \ X-RPW-UT \ x-hcpsd-tbb \ X-HCPSD-TTLB-24X36 \ HCPSD-CONTOURS \ x-hcpsd-sid \ chase\

PLANT SCHEDULE

LARGE TREES

SCIENTIFIC NAME	COMMON NAME	WL STATUS	QTY./ZONE 1	2	3	4	SPACING	SIZE (MIN.)	NOTES
PSEUDOTSUGA MENZIESII	DOUGLAS FIR	FACU	-	-	8	-	AS SHOWN	6' HT.	FULL & BUSHY

SMALL TREES/LARGE SHRUBS

SCIENTIFIC NAME	COMMON NAME	WL STATUS	QTY./ZONE 1	2	3	4	SPACING	SIZE (MIN.)	NOTES
ACER CIRCINATUM	VINE MAPLE	FAC	-	-	40	-	AS SHOWN	4' HT.	SINGLE TRUNK, WELL BRANCHED
AMELANCHIER ALNIFOLIA	SERVICEBERRY	FACU	-	-	9	-	5' O.C.	24" HT.	MULTI-CANE (3 MIN.)
CORYLUS CORNUTA	WESTERN HAZELNUT	FACU	-	-	8	-	AS SHOWN	4-5' HT.	SINGLE TRUNK, WELL BRANCHED
CRATAEGUS DOUGLASII	BLACK HAWTHORN	FAC	134	-	84	-	5' O.C.	24" HT.	MULTI-CANE (3 MIN.)
OEMLERIA CERASIFORMIS	INDIAN PLUM	FACU	-	-	75	-	5' O.C.	24" HT.	MULTI-CANE (3 MIN.)
SALIX SCOULERIANA	SCOULER WILLOW	FAC	36	312	288	342	3/SYMBOL	4' CUTTING	½" DIA. MIN., BARK INTACT
SALIX SITCHENSIS	SITKA WILLOW	FACW	162	-	-	342	3/SYMBOL	4' CUTTING	½" DIA. MIN., BARK INTACT
SAMBUCUS RACEMOSA	RED ELDERBERRY	FACU	27	49	16	-	5' O.C.	24" HT.	MULTI-CANE (3 MIN.)

MASSING SHRUBS

SYMBOL	SCIENTIFIC NAME	COMMON NAME	WL STATUS	QTY./ZONE 1	2	3	4	SPACING	SIZE (MIN.)	NOTES
	CORNUS ALBA (SERICEA)	RED-OSIER DOGWOOD	FACW	112	385	236	-	4' O.C.	1 GAL.	MULTI-CANE (3 MIN.)
	LONICERA INVOLUCRATA	BLACK TWIN-BERRY	FAC	137	-	-	-	4' O.C.	1 GAL.	MULTI-CANE (3 MIN.)
	ROSA NUTKANA	NOOTKA ROSE	FACU	-	-	12	-	4' O.C.	1 GAL.	MULTI-CANE (3 MIN.)
	ROSA PISOCARPA	CLUSTERED WILD ROSE	FAC	107	-	-	-	4' O.C.	1 GAL.	MULTI-CANE (3 MIN.)
	RUBUS PARVIFLORUS	THIMBLEBERRY	FACU	-	-	27	-	4' O.C.	1 GAL.	MULTI-CANE (3 MIN.)
	RUBUS SPECTABILIS	SALMONBERRY	FAC	93	-	-	-	4' O.C.	1 GAL.	MULTI-CANE (3 MIN.)
	SPIREA DOUGLASII	WESTERN SPIREA	FACW	86	213	-	-	4' O.C.	1 GAL.	FULL & BUSHY

GROUNDCOVERS

SYMBOL	SCIENTIFIC NAME	COMMON NAME	WL STATUS	QTY./ZONE 1	2	3	4	SPACING	SIZE (MIN.)	NOTES
	GAULTHERIA SHALLON	SALAL	FACU	-	-	787	-	3' O.C.	1 GAL.	FULL & BUSHY
	SYMPHORICARPOS ALBUS	SNOWBERRY	FACU	-	-	727	-	4' O.C.	1 GAL.	MULTI-CANE (3 MIN.)

NATIVE WETLAND GRASS SEED MIX** (20-25 LBS/ACRE)

SYMBOL	SCIENTIFIC NAME	COMMON NAME	%	WL STATUS	QTY./ZONE 1	2	3	4	UNITS
	GLYCERIA OCCIDENTALIS	WESTERN MANNAGRASS	30	OBL	10	1	-	-	LBS.
	BECKMANNIA SYZIGACHNE	AMERICAN SLOUGHGRASS	60	OBL					
	HORDEUM BRACHYANTHERUM	MEADOW BARLEY	10	FACW					
	ALOPECURUS AEQUALIS	SHORTAWN FOXTAIL	10	OBL					

NATIVE UPLAND GRASS SEED MIX** (20-25 LBS/ACRE)

SYMBOL	SCIENTIFIC NAME	COMMON NAME	%	WL STATUS	QTY./ZONE 1	2	3	4	UNITS
	ELYMUS GLAUCUS	BLUE WILDRYE	30	UPL	3	18	6	-	LBS.
	BROMUS CARINATUS	CALIFORNIA BROME	25	NL					
	HORDEUM BRACHYANTHERUM	MEADOW BARLEY	10	FACW					
	FESTUCA ROMERI	ROEMER'S FESCUE	10	NL					
	DESCHAMPSIA ELONGATA	SLENDER HAIRGRASS	10	FACW					
	AGROSTIS EXARATA	SPIKE BENTGRASS	5	FACW					
	DESCHAMPSIA CESPITOSA	TUFTED HAIRGRASS	5	FACW					
	FESTUCA RUBRA RUBRA	RED FESCUE	5	NL					

** NATIVE GRASS SEED MIXES WILL BE USED AS A FAST GROWING GROUNDCOVER IN MANY AREAS THAT WILL REDUCE THE RESURGENCE OF REED CANARYGRASS WHILE SHRUB PLANTINGS GROW UP TO SHADE OUT THIS INVASIVE SPECIES.

GENERAL PLANT INSTALLATION NOTES

1. PLANT TREES AND/OR SHRUBS 1" HIGHER THAN DEPTH GROWN AT NURSERY.
2. FOR CONTAINER TREES AND/OR SHRUBS, SCORE FOUR SIDES OF ROOTBALL PRIOR TO PLANTING. BUTTERFLY ROOTBALL IF ROOT CIRCLING IS EVIDENT.
3. STAKE DECIDUOUS AND EVERGREEN TREES 4 FEET AND OVER IN HEIGHT WITH ONE (1) STAKE PER TREE. STAKE TREES IMMEDIATELY AFTER PLANTING. PLACE STAKE AT THE OUTER EDGE OF THE ROOTS OR ROOTBALL, IN LINE WITH THE PREVAILING WIND. STAKES SHALL BE LOOSELY ATTACHED USING CHAIN-LOCK TREE TIES TO ALLOW FOR SOME TRUNK MOVEMENT. STAKES TO BE VERTICAL, PARALLEL, EVEN-TOPPED, UNSCARRED AND DRIVEN INTO UNDISTURBED SUBGRADE. REMOVE AFTER ONE YEAR.
4. WATER PLANTS IMMEDIATELY UPON PLANTING, THEN PROVIDE MANUAL WATERING OR A TEMPORARY IRRIGATION SYSTEM TO PREVENT PLANT MORTALITY AND ENSURE PROPER PLANT ESTABLISHMENT. PLANTS SHALL RECEIVE A MINIMUM OF APPROXIMATELY ONE INCH OF WATER EVERY WEEK DURING THE DRY SEASON (GENERALLY JUNE 15TH - OCTOBER 15TH, OR EARLIER OR LATER IF CONDITIONS WARRANT) FOR THE FIRST SEASON AFTER PLANTING. IRRIGATION AMOUNTS MAY NEED TO BE INCREASED DURING PROLONGED PERIODS OF HOT, DRY WEATHER.
5. IN THE BUFFER AREAS ONLY, FERTILIZE ALL TREES AND SHRUBS WITH A SLOW-RELEASE GENERAL PURPOSE GRANULAR FERTILIZER OR SLOW-RELEASE TABLETS AT MANUFACTURER'S SPECIFIED RATE. NO FERTILIZER SHALL BE APPLIED WITHIN WETLAND AREAS.
6. IN THE BUFFER AREAS ONLY. A SOIL MOISTURE RETENTION AGENT, SUCH AS "SOILMOIST" OR EQUAL, SHALL BE INCORPORATED INTO THE BACKFILL OF EACH PLANTING PIT, PER MANUFACTURER'S INSTRUCTIONS. NO MOISTURE RETENTION AGENT SHALL BE APPLIED WITHIN WETLAND AREAS.

PLANTING DENSITY TABLES

ZONE 1: PLANTING DENSITY TABLE - WETLAND E

	REQUIRED	DESIGNED
WETLAND AREA	30,361 SF	
MAINTENANCE ACCESS ROAD	7,523 SF	
PLANTED AREA	22,027 SF	
TREES 9' O.C.*	0	0
SHRUBS 6' O.C.	617	894
GROUNDCOVER 4' O.C.	5,507	5,507

* PER CITY OF ISSAQUAH, NO TREES WILL BE PLANTED WITHIN STORMWATER EASEMENTS.

ZONE 2: PLANTING DENSITY TABLE - WETLAND E BUFFER

	REQUIRED	DESIGNED
PLANTED AREA	33,792 SF	
TREES 9' O.C.*	0	0
SHRUBS 6' O.C. (FULL COVERAGE)	946	962
GROUNDCOVER 4' O.C. (50% COVERAGE)	8,448	8,448

* PER CITY OF ISSAQUAH, NO TREES WILL BE PLANTED WITHIN STORMWATER EASEMENTS.

ZONE 3: PLANTING DENSITY TABLE - TIBBETTS CREEK BUFFER

	REQUIRED	DESIGNED
PLANTED AREA	26,154 SF	
TREES 9' O.C.*	0	8
SHRUBS 6' O.C.	732	833
GROUNDCOVER 4' O.C.	6,539	6,539

* EXTENSIVE OVERHEAD AND UNDERGROUND UTILITIES IN THIS AREA PREVENT THE USE OF LARGE TREES ON WITHIN MUCH OF THE RESTORED BUFFER. CONIFERS WILL BE PLACED IN THE FIELD IN A LIMITED FASHION.

PLANT COMMUNITIES LEGEND

ZONE 1 (WETLAND E RESTORATION; SCRUB-SHRUB WETLAND)	28,974 SF (0.67 AC)
ZONE 2 (WETLAND E BUFFER RESTORATION; SCRUB-SHRUB AND UPLAND MEADOW)	33,792 SF (0.78 AC)
ZONE 3 (TIBBETT'S CREEK BUFFER RESTORATION; SCRUB-SHRUB)	26,154 SF (0.60 AC)
ZONE 4 (RESTORATION ENHANCEMENT OF EXISTING RESTORATION PLANTED AREAS) 8,237 SF X 0.0277 (6' O.C.) = 228 X 3 3 WILLOW STAKES PER PLANTING TO INFILL AREAS WHERE EXISTING WILLOW STAKES ARE >10' O.C.	684 WILLOW STAKES

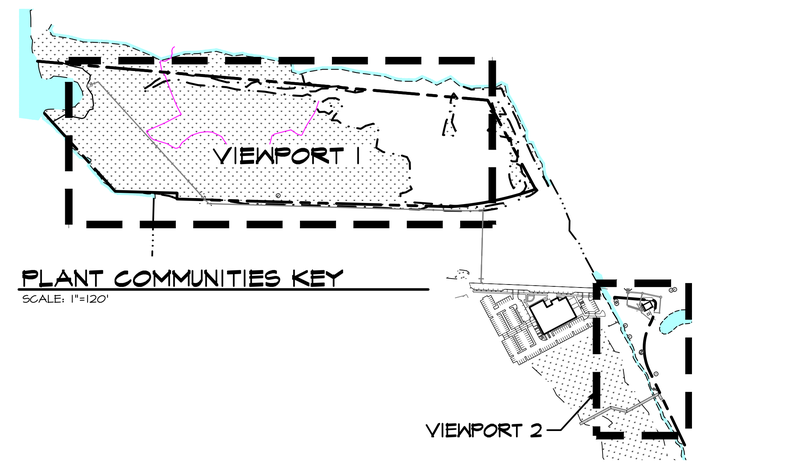

PLANT COMMUNITIES KEY
SCALE: 1"=120'

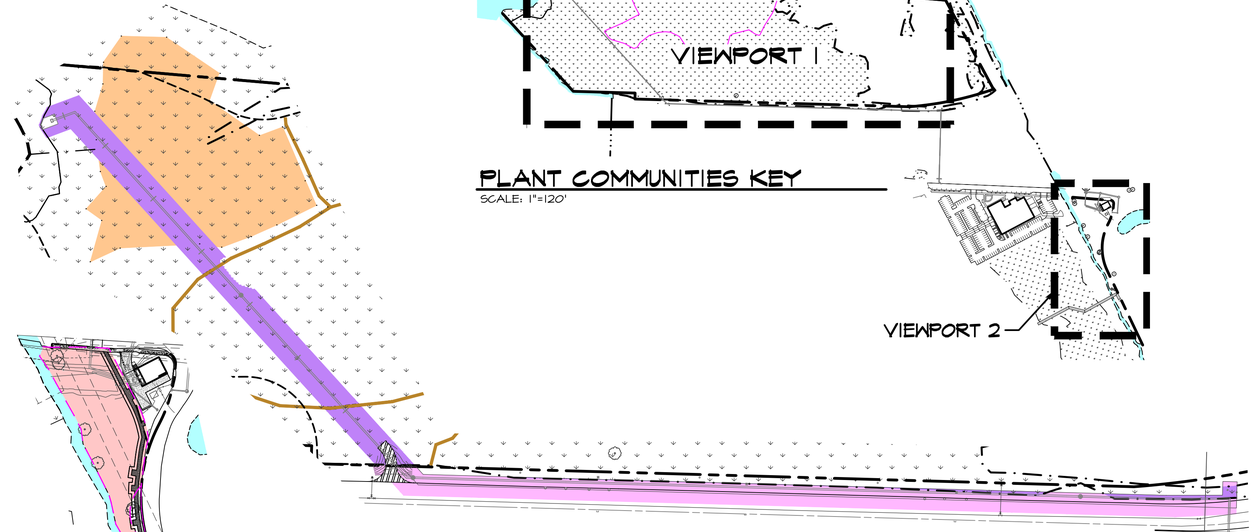

VIEWPORT 1
SCALE: 1"=120'

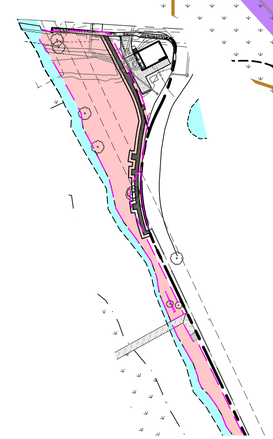

VIEWPORT 2
SCALE: 1"=120'

NOT FOR CONSTRUCTION

THESE PLANS HAVE BEEN SUBMITTED TO THE APPROPRIATE AGENCIES FOR REVIEW AND APPROVAL. UNTIL APPROVED, THESE PLANS ARE:

SUBJECT TO REVISION

811 Know what's below. Call before you dig.

NOTES

1. SURVEY PROVIDED BY BUSH, ROED, & HITCHINGS INC., 2009 MINOR AVE E SEATTLE, WA 98102-3513, (206) 323-4144.
2. SITE PLAN PROVIDED BY KPFF, 1601 5TH AVE SUITE 1600 SEATTLE, WA 98101 , (206) 622-5822.
3. SOURCE DRAWING WAS MODIFIED BY TALASAEA CONSULTANTS FOR VISUAL ENHANCEMENT.
4. THIS PLAN IS AN ATTACHMENT TO THE CRITICAL AREAS REPORT PREPARED BY TALASAEA CONSULTANTS IN APRIL, 2021.

kpff
1601 5th Avenue, Suite 1600
Seattle, WA 98101
206.622.5822
www.kpff.com

CONSULTANT
TALASAEA CONSULTANTS, INC.
Resource and Environmental Planning
15020 Bear Creek Road Northeast
Woodinville, Washington 98077
Bus (425) 861-7550 - Fax (425) 861-7549

PROJECT
HYLA CROSSING PUMPED STORMWATER DISCHARGE

ISSAQUAH, WA

OWNER
ROWLEY PROPERTIES
1595 NW GILMAN BLVD
ISSAQUAH WA, 98027

PROFESSIONAL SEAL

DESIGN TEAM	EP, AO
PRINCIPAL	BS
PROJECT MANAGER	AO
PROJECT ARCHITECT	EP
DRAWN BY	FH
CHECKED BY	AO

DRAWING SET DESCRIPTION
ASDP REVISION #1

REVISIONS

No.	DATE	DESCRIPTION
1	10/3/2019	30% CD
2	4/1/2020	ASDP
3	4/12/2021	ASDP REVISION #1

SHEET TITLE
PLANT SCHEDULE & NOTES

SHEET NUMBER
W3.3

ISSUE DATE
4/12/2021

Apr 09, 2021 - 4:03pm rhuynh Z:\DRAWING\1700-1799\TAL1775\Plans\TAL-1775.WP 2021-03.dwg
Xref Filename: \ XS-SUR-16 \ x-hcpsd-sv \ X-HCPSD-CON-STG \ x-hcpsd-sd PF \ X-HCPSD-SP \ x-hcpsd-sp-tut \ X-HCPSD-UT \ X-RPW-BLDG \ X-RPW-SD \ X-RPW-SP \ X-RPW-UT \ x-hcpsd-bbs \ X-HCPSD-TTLB-24X36 \ HCPSD-CONTOURS \ x-hcpsd-sd \ chase\

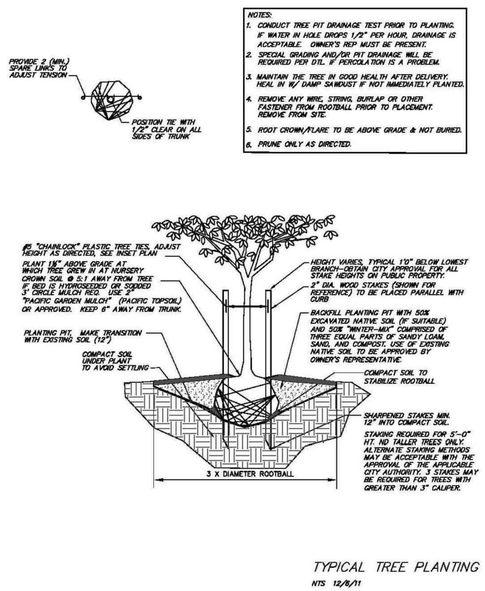

1 TYPICAL TREE PLANTING DETAIL
NOT TO SCALE

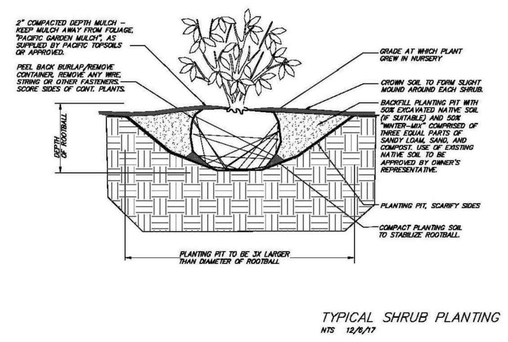

2 TYPICAL SHRUB PLANTING DETAIL
NOT TO SCALE

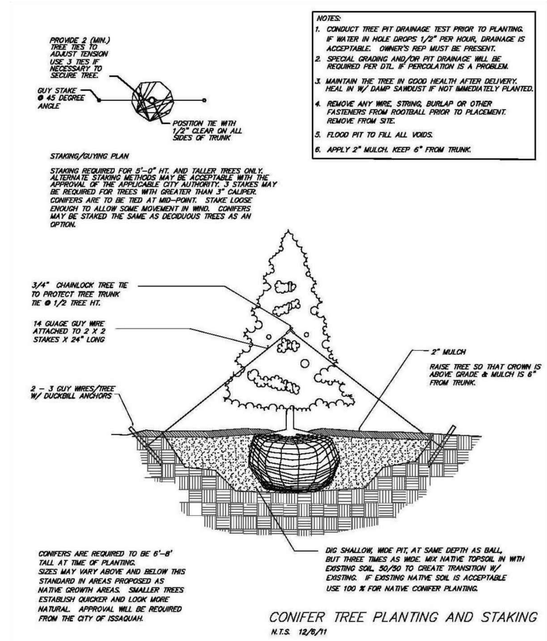

3 TYPICAL CONIFER TREE PLANTING DETAIL
NOT TO SCALE

NOTE:
STANDARD DETAILS PER DEVELOPER'S AGREEMENT APPENDIX G, LANDSCAPE.

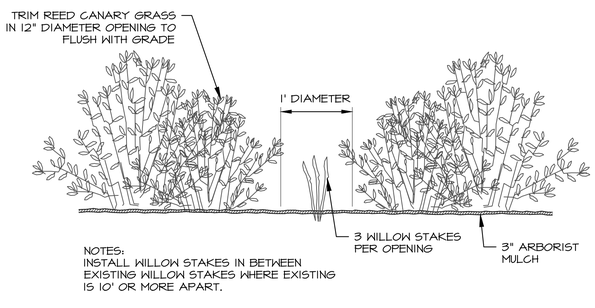

4 WILLOW STAKES
NOT TO SCALE

5 GRASSPAVE²
NOT TO SCALE

NOTE: 6" COMPACTED BASE COURSE PER MANUFACTURER RECOMMENDATION

NOT FOR CONSTRUCTION
THESE PLANS HAVE BEEN SUBMITTED TO THE APPROPRIATE AGENCIES FOR REVIEW AND APPROVAL. UNTIL APPROVED, THESE PLANS ARE:
SUBJECT TO REVISION

811
Know what's **below.**
Call before you dig.

NOTES
1. SURVEY PROVIDED BY BUSH, ROED, & HITCHINGS INC., 2009 MINOR AVE E SEATTLE, WA 98102-3513, (206) 323-4144.
2. SITE PLAN PROVIDED BY KPFF, 1601 5TH AVE SUITE 1600 SEATTLE, WA 98101 , (206) 622-5822.
3. SOURCE DRAWING WAS MODIFIED BY TALASAEA CONSULTANTS FOR VISUAL ENHANCEMENT.
4. THIS PLAN IS AN ATTACHMENT TO THE CRITICAL AREAS REPORT PREPARED BY TALASAEA CONSULTANTS IN APRIL, 2021.

kpff
1601 5th Avenue, Suite 1600
Seattle, WA 98101
206.622.5822
www.kpff.com

CONSULTANT
TALASAEA CONSULTANTS, INC.
Resource and Environmental Planning
15020 Bear Creek Road Northeast
Woodinville, Washington 98077
Bus (425) 861-7050 - Fax (425) 861-7549

PROJECT
HYLA CROSSING PUMPED STORMWATER DISCHARGE
ISSAQUAH, WA

OWNER
ROWLEY PROPERTIES
1595 NW GILMAN BLVD
ISSAQUAH WA, 98027

PROFESSIONAL SEAL

DESIGN TEAM	EP, AO
PRINCIPAL	BS
PROJECT MANAGER	AO
PROJECT ARCHITECT	EP
DRAWN BY	FH
CHECKED BY	AO

DRAWING SET DESCRIPTION
ASDP
REVISION #1

REVISIONS

No.	DATE	DESCRIPTION
1	10/3/2019	**30% CD**
2	4/1/2020	**ASDP**
3	4/12/2021	**ASDP REVISION #1**

SHEET TITLE
PLANTING DETAILS

SHEET NUMBER
W3.4

ISSUE DATE
4/12/2021

Apr 08, 2021 - 1:29pm ftuynh Z:\DRAWING\1700s-1799\TAL1775\Plans\TAL-1775 WP 2021-03.dwg
Xref Filename: \ XS-SUR-16 \ x-hcpsd-sv \ X-HCPSD-CON-STG \ x-hcpsd-sd PF \ X-HCPSD-SP \ x-hcpsd-sp-tal \ X-HCPSD-UT \ X-RPW-BLDG \ X-RPW-SD \ X-RPW-SP \ X-RPW-UT \ x-hcpsd-lbb \ X-HCPSD-TTLB-24X36 \ X-HCPSD-CONTOURS \ x-hcpsd-sd \ chase\

PLANTING SPECIFICATIONS

PART 1: GENERAL

1.1 SEQUENCING

A. GENERAL CONSTRUCTION

1. CONTRACTOR SHALL GIVE THE PROJECT BIOLOGIST OR ECOLOGIST A MINIMUM OF TEN (10) DAYS NOTICE PRIOR TO COMMENCING CONSTRUCTION.
2. NO CONSTRUCTION WORK SHALL COMMENCE UNTIL THERE IS A MEETING BETWEEN THE CLIENT, THE PROJECT BIOLOGIST OR ECOLOGIST, THE GENERAL, CLEARING, AND/OR EARTHWORK CONTRACTORS, AND THE LANDSCAPE CONTRACTOR. THE APPROVED PLANS AND SPECIFICATIONS SHALL BE REVIEWED TO ENSURE THAT ALL PARTIES INVOLVED UNDERSTAND THE INTENT AND THE SPECIFIC DETAILS RELATED TO THE CONSTRUCTION DOCUMENTS, SPECIFICATIONS, AND SITE CONSTRAINTS.
3. LOCATIONS OF EXISTING UTILITIES HAVE BEEN ESTABLISHED BY FIELD SURVEY OR OBTAINED FROM AVAILABLE RECORDS AND SHOULD BE CONSIDERED APPROXIMATE ONLY AND NOT NECESSARILY COMPLETE. IT IS THE SOLE RESPONSIBILITY OF THE CONTRACTOR TO: (1) INDEPENDENTLY VERIFY THE ACCURACY OF UTILITY LOCATIONS, AND (2) DISCOVER AND AVOID ANY UTILITIES WITHIN THE MITIGATION AREA(S) THAT ARE NOT SHOWN, BUT WHICH MAY BE AFFECTED BY IMPLEMENTATION OF THE PLAN. SUCH AREA(S) ARE TO BE CLEARLY MARKED IN THE FIELD. THE PROJECT BIOLOGIST OR ECOLOGIST SHALL RESOLVE ANY CONFLICTS WITH THE APPROVED GRADING PLAN PRIOR TO START OF CONSTRUCTION.
4. A COPY OF THE APPROVED PLANS MUST BE ON SITE WHENEVER CONSTRUCTION IS IN PROGRESS, AND SHALL REMAIN ON SITE UNTIL PROJECT COMPLETION.
5. CONSTRUCTION MUST BE PERFORMED IN ACCORDANCE WITH ALL AGENCY STANDARDS, RULES, CODES, PERMIT CONDITIONS, AND/OR OTHER APPLICABLE ORDINANCES AND POLICIES.
6. THE PROJECT OWNER/APPLICANT IS RESPONSIBLE FOR OBTAINING ANY OTHER RELATED OR REQUIRED PERMITS PRIOR TO THE START OF CONSTRUCTION.
7. A QUALIFIED WETLAND CONSULTANT SHALL BE ON SITE, AS NECESSARY, TO MONITOR CONSTRUCTION AND APPROVE MINOR REVISIONS TO THE PLAN.
8. DURING CONSTRUCTION, THE CONTRACTOR MUST USE MATERIALS AND CONSTRUCTION METHODS THAT PREVENT TOXIC SUBSTANCES AND OTHER POLLUTANTS FROM ENTERING MITIGATION AREAS OR OTHER NATURAL WATERS OF THE STATE.
9. PREVENTATIVE MEASURES SHALL BE USED TO PROTECT EXISTING STORM DRAINAGE SYSTEMS, EXISTING UTILITIES, AND ROADS.
10. PROVIDE SEDIMENT AND EROSION CONTROLS AROUND THE PROJECT AREA PRIOR TO SOIL DISTURBANCE FROM CONSTRUCTION ACTIVITY.

B. MITIGATION CONSTRUCTION: THE FOLLOWING PROVIDES THE GENERAL SEQUENCE OF ACTIVITIES ANTICIPATED TO BE NECESSARY TO COMPLETE THE PLANTING PORTION OF THE MITIGATION PROJECT. SOME OF THESE ACTIVITIES MAY BE CONDUCTED CONCURRENTLY AS THE PROJECT PROGRESSES.

1. CONDUCT A SITE MEETING BETWEEN THE CONTRACTOR, THE PROJECT BIOLOGIST OR ECOLOGIST, AND THE OWNER'S REPRESENTATIVE TO REVIEW THE PROJECT PLANS, STAGING/STOCKPILE AREAS, AND MATERIAL DISPOSAL AREAS.
2. PLANT TREES AND SHRUBS AS INDICATED ON MITIGATION PLANS.
3. PLANT STAKES (CUTTINGS).
4. MULCH NEWLY INSTALLED PLANTS.
5. INSTALL TEMPORARY IRRIGATION SYSTEM AND PROGRAM FOR 0.5 INCHES OF WATER EVERY 3 DAYS.
6. INSTALL FENCING AND CRITICAL AREA PROTECTION SIGNS.

1.2 SUBMITTALS

A. PRODUCT DATA: FURNISH THE FOLLOWING WITH EACH PLANT MATERIAL DELIVERY:

1. INVOICES INDICATING SIZES AND VARIETY OF PLANT MATERIAL.
2. CERTIFICATES OF INSPECTION REQUIRED BY STATE AND FEDERAL AGENCIES.

B. QUALITY CONTROL SUBMITTALS:

1. PRIOR TO DELIVERY OF MATERIALS, CERTIFICATES OF COMPLIANCE ATTESTING THAT MATERIALS MEET THE SPECIFIED REQUIREMENTS SHALL BE FURNISHED FOR THE FOLLOWING: PLANTS, TOPSOIL, FERTILIZER, AND ORGANIC MULCH. CERTIFIED COPIES OF THE MATERIAL CERTIFICATES SHALL INCLUDE THE FOLLOWING:
   a. PLANT MATERIALS: BOTANICAL NAME, COMMON NAME, SIZE, QUANTITY BY SPECIES, AND LOCATION WHERE GROWN.
   b. IMPORTED TOPSOIL: PARTICLE SIZE, PH, ORGANIC MATTER CONTENT, TEXTURAL CLASS, SOLUBLE SALTS, CHEMICAL AND MECHANICAL ANALYSES.
   c. FERTILIZER: CHEMICAL ANALYSIS AND PERCENT COMPOSITION.
   d. IMPORTED MULCH: COMPOSITION AND SOURCE.

1.3 REFERENCES

A. SIZE AND GRADING STANDARDS: SHALL CONFORM TO THE CURRENT EDITION OF THE AMERICAN STANDARD FOR NURSERY STOCK, PUBLISHED BY THE AMERICAN NURSERY AND LANDSCAPE ASSOCIATION.

1.4 QUALITY ASSURANCE

A. WORKER'S QUALIFICATIONS: THE PERSONS PERFORMING THE PLANTING AND THEIR SUPERVISOR(S) SHALL BE PERSONALLY EXPERIENCED WITH PLANTING AND CARING FOR PLANT MATERIAL, AND SHALL HAVE BEEN REGULARLY EMPLOYED BY A COMPANY ENGAGED IN PLANTING AND CARING FOR PLANT MATERIAL FOR A MINIMUM OF 2 YEARS.

B. PLANT MATERIAL: ALL PLANT MATERIALS SHALL BE LOCALLY GROWN OR REGIONALLY ACCLIMATIZED TO THE PACIFIC NORTHWEST.

1.5 DELIVERY, INSPECTION, STORAGE AND HANDLING

A. DELIVERY: A DELIVERY SCHEDULE SHALL BE PROVIDED AT LEAST 10 CALENDAR DAYS PRIOR TO THE FIRST DAY OF DELIVERY. PLANT MATERIALS SHALL BE DELIVERED TO THE JOB SITE NOT MORE THAN 7 WORKING DAYS PRIOR TO THEIR RESPECTIVE PLANTING DATES.

B. PROTECTION DURING DELIVERY: PLANT MATERIAL SHALL BE PROTECTED DURING DELIVERY TO PREVENT DESICCATION AND DAMAGE TO THE BRANCHES, TRUNK, ROOT SYSTEM, OR EARTH BALL. BRANCHES SHALL BE PROTECTED BY TYING-IN. EXPOSED BRANCHES SHALL BE COVERED DURING TRANSPORT.

C. FERTILIZER: FERTILIZER SHALL BE DELIVERED IN MANUFACTURER'S STANDARD SIZED BAGS SHOWING WEIGHT, ANALYSIS, AND MANUFACTURER'S NAME. STORE UNDER A WATERPROOF COVER OR IN A DRY PLACE AS DESIGNATED BY THE OWNER'S REPRESENTATIVE.

D. INSPECTION: ALL PLANT MATERIALS SHALL BE INSPECTED UPON ARRIVAL AT THE JOB SITE BY THE OWNER'S REPRESENTATIVE FOR CONFORMITY TO TYPE AND QUANTITY WITH REGARD TO THEIR RESPECTIVE SPECIFICATIONS.

E. MULCH: A MULCH SAMPLE SHALL BE INSPECTED BY THE PROJECT BIOLOGIST OR ECOLOGIST PRIOR TO THE MULCH BEING DELIVERED TO THE SITE.

F. STORAGE:

1. PLANT MATERIAL NOT INSTALLED ON THE DAY OF ARRIVAL AT THE SITE SHALL BE STORED AND PROTECTED IN DESIGNATED AREAS. PLANTS STORED ON THE PROJECT SITE SHALL BE PROTECTED FROM EXTREME WEATHER CONDITIONS BY INSULATING THE ROOTS, ROOT BALLS OR CONTAINERS WITH SAWDUST, SOIL, COMPOST, BARK OR WOODCHIPS. PLANT MATERIAL SHALL BE PROTECTED FROM DIRECT EXPOSURE TO WIND AND SUN. BARE-ROOT PLANT MATERIAL SHALL BE HEELED-IN. CUTTINGS AND EMERGENT PLANTS MUST BE PROTECTED FROM DRYING AT ALL TIMES AND SHALL BE HEELED-IN WITH MOIST SOIL OR OTHER INSULATING MATERIAL. ALL PLANT MATERIAL STORED ON-SITE SHALL BE WATERED DAILY UNTIL INSTALLED.
2. STORAGE OF OTHER MATERIALS SHALL BE IN DESIGNATED AREAS.

1.6 SCHEDULING

A. PLANTING SEASON: INSTALL WOODY PLANTS BETWEEN OCTOBER 1 AND FEBRUARY 15 WHENEVER THE TEMPERATURE IS ABOVE 32 DEGREES F AND THE SOIL IS IN A WORKABLE CONDITION, UNLESS OTHERWISE APPROVED IN WRITING. CUTTINGS SHALL ONLY BE USED IF PLANTING OCCURS BETWEEN DECEMBER 1ST AND APRIL 1ST.

B. PLANT INSTALLATION: EXCEPT FOR CONTAINER-GROWN PLANT MATERIAL, THE MAXIMUM TIME BETWEEN THE DIGGING AND INSTALLATION OF PLANT MATERIAL SHALL BE 21 DAYS. THE MAXIMUM TIME BETWEEN PLANT INSTALLATION AND MULCH PLACEMENT SHALL BE 72 HOURS.

1.7 WARRANTY

A. WARRANTY PERIOD: THE CONTRACTOR-PROVIDED WARRANTY SHALL EXTEND FOR A PERIOD OF ONE YEAR FROM THE DATE OF PHYSICAL COMPLETION. PHYSICAL COMPLETION FOR THE WORK OF THIS SECTION IS THE DATE WHEN ALL GRADING, PLANTING, IRRIGATION, AND RELATED WORK HAS BEEN COMPLETED AND IS ACCEPTED BY THE OWNER'S REPRESENTATIVE, THE PROJECT BIOLOGIST OR ECOLOGIST, AND APPLICABLE AGENCIES.

B. WARRANTY TERMS: CONTRACTOR'S WARRANTY SHALL INCLUDE REPLACEMENT OF PLANTS DUE TO MORTALITY (SAME SIZE AND SPECIES SHOWN ON THE DRAWINGS). PLANTS REPLACED UNDER THIS WARRANTY SHALL BE WARRANTED FOR AN ADDITIONAL YEAR AFTER REPLACEMENT.

C. EXCEPTIONS: LOSS DUE TO EXCESSIVELY SEVERE CLIMATOLOGICAL CONDITIONS (SUBSTANTIATED BY 10-YEAR RECORDED WEATHER CHARTS), OR CASES OF NEGLECT BY OWNER, OR CASES OF ABUSE/DAMAGE BY OTHERS.

PART 2: PRODUCTS AND MATERIALS

2.1 PLANTS

A. GENERAL: ALL PLANT MATERIAL WILL CONFORM TO THE VARIETIES SPECIFIED OR SHOWN IN THE PLANT LIST(S) INDICATED ON THE MITIGATION PLANS AND BE TRUE TO BOTANICAL NAME AS LISTED IN: HITCHCOCK, C.L., AND A. CRONQUIST. 1973. FLORA OF THE PACIFIC NORTHWEST. UNIVERSITY OF WASHINGTON PRESS.

B. SHRUBS AND TREES:

1. THE PROJECT BIOLOGIST OR ECOLOGIST SHALL EXAMINE PLANT MATERIAL PRIOR TO PLANTING. ANY MATERIAL NOT MEETING THE REQUIRED SPECIFICATIONS SHALL BE IMMEDIATELY REMOVED FROM THE SITE AND REPLACED WITH LIKE MATERIAL THAT MEETS THE REQUIRED STANDARDS. PLANT MATERIAL SHALL MEET THE REQUIREMENTS OF STATE AND FEDERAL LAWS WITH RESPECT TO PLANT DISEASE AND INFESTATIONS. INSPECTION CERTIFICATES, REQUIRED BY LAW, SHALL ACCOMPANY EACH AND EVERY SHIPMENT AND SHALL BE SUBMITTED TO THE PROJECT BIOLOGIST OR ECOLOGIST UPON CONTRACTOR'S RECEIPT OF PLANT MATERIAL.
2. PLANT MATERIALS SHALL BE LOCALLY GROWN (WESTERN WASHINGTON, WESTERN OREGON, OR WESTERN BC), HEALTHY, BUSHY, IN VIGOROUS GROWING CONDITION, AND GUARANTEED TO BE TRUE TO SIZE, NAME, AND VARIETY. IF REPLACEMENT OF PLANT MATERIAL IS NECESSARY DUE TO CONSTRUCTION DAMAGE OR PLANT FAILURE WITHIN ONE YEAR OF INSTALLATION, THE SIZES, SPECIES, AND QUANTITIES SHALL BE EQUAL TO SPECIFIED PLANTS, AS INDICATED ON THE PLANS.
3. PLANTS SHALL BE NURSERY GROWN, WELL-ROOTED, OF NORMAL GROWTH AND CHARACTER, AND FREE FROM DISEASE OR INFESTATION. THE PROJECT BIOLOGIST OR ECOLOGIST RESERVES THE RIGHT TO REQUIRE REPLACEMENT OR SUBSTITUTION OF ANY PLANTS DEEMED UNSUITABLE.
4. TREES SHALL HAVE UNIFORM BRANCHING, SINGLE STRAIGHT TRUNKS (UNLESS SPECIFIED AS MULTI-STEM, MULTI-CANE, OR MULTI-TRUNK), AND AN INTACT AND UNDAMAGED CENTRAL LEADER. CONTAINER STOCK SHALL HAVE BEEN GROWN IN A CONTAINER FOR AT LEAST ONE FULL GROWING SEASON AND SHALL HAVE A WELL DEVELOPED ROOT SYSTEM. PLANT MATERIAL THAT IS ROOT-BOUND OR HAS DAMAGED ROOT ZONES OR BROKEN ROOT BALLS WILL NOT BE ACCEPTED.
5. CONIFEROUS TREES SHALL BE NURSERY GROWN, FULL AND BUSHY, WITH UNIFORM BRANCHING AND A NATURAL, NON-SHEARED FORM. ORIGINAL CENTRAL LEADER MUST BE HEALTHY AND UNDAMAGED. MAXIMUM GAP BETWEEN BRANCHING SHALL NOT EXCEED 9 INCHES, AND LENGTH OF TOP LEADER SHALL NOT EXCEED 12 INCHES.
6. SHRUBS SHALL HAVE A MINIMUM OF THREE STEMS AND SHALL BE A MINIMUM HEIGHT OF 18 INCHES.
7. TREES AND SHRUBS SHALL HAVE DEVELOPED ROOT AND BRANCH SYSTEMS. DO NOT PRUNE BRANCHES BEFORE DELIVERY.
8. NATIVE PLANT CUTTINGS SHALL BE GROWN AND COLLECTED IN THE MARITIME PACIFIC NORTHWEST. CUTTINGS SHALL BE OF ONE TO TWO-YEAR-OLD WOOD, ½ INCH DIAMETER MINIMUM. CUTTINGS SHALL BE A MINIMUM OF 4 FEET IN LENGTH WITH 4 LATERAL BUDS EXPOSED ABOVE GROUND AFTER PLANTING. THE TOP OF EACH CUTTING SHALL BE A MINIMUM OF 1 INCH ABOVE A LEAF BUD, THE BOTTOM CUT 2 INCHES BELOW A BUD. THE BASAL ENDS OF THE CUTTINGS SHALL BE CUT AT A 45 DEGREE ANGLE AND MARKED CLEARLY SO THAT THE ROOTING END IS PLANTED IN THE SOIL. CUTTINGS MUST BE KEPT COVERED AND MOIST DURING STORAGE AND TRANSPORT, AND NO CUTTINGS SHALL BE STORED MORE THAN THREE DAYS FROM DATE OF CUTTING. CUTTINGS SHALL ONLY BE USED IF PLANTING OCCURS BETWEEN DECEMBER 1ST AND APRIL 1ST. FOR PLANTING BETWEEN APRIL 1ST AND DECEMBER 1ST, CONTAINER PLANTS SHALL BE USED.
9. PLANTS SHALL BE FREE OF SPLITS AND CHECKS, BARK ABRASIONS, AND DISFIGURING KNOTS.
10. FOR DECIDUOUS PLANTS, BUDS SHALL BE INTACT AND REASONABLY CLOSED AT TIME OF PLANTING, IF DORMANT.
11. BALLED AND BURLAPPED PLANTS SHALL HOLD A NATURAL BALL. MANUFACTURED ROOT BALLS ARE UNACCEPTABLE.
12. PLANTS SHALL CONFORM TO SIZES INDICATED ON THE PLANT SCHEDULE. PLANTS MAY BE LARGER THAN THE MINIMUM SIZES SPECIFIED.

C. SEED MIXES:

1. SEED MIXES SHALL BE PROVIDED AS DESCRIBED IN THE PLANT SCHEDULE.

D. NOXIOUS SPECIES: ALL PLANT STOCK AND OTHER RE-VEGETATION MATERIALS SHALL BE FREE FROM THE SEED OR OTHER PLANT COMPONENTS OF ANY NOXIOUS OR INVASIVE SPECIES, AS IDENTIFIED BY THE KING COUNTY NOXIOUS WEED CONTROL BOARD.

E. SUBSTITUTIONS: SUBSTITUTIONS WILL NOT BE PERMITTED WITHOUT A WRITTEN REQUEST AND APPROVAL FROM THE OWNER'S REPRESENTATIVE, THE PROJECT BIOLOGIST OR ECOLOGIST, AND APPLICABLE AGENCIES.

2.2 PLANTING SOIL

A. TOPSOIL: IF SUITABLE STOCKPILED NATIVE TOPSOIL IS NOT AVAILABLE FOR MITIGATION PLANTINGS, TOPSOIL SHALL BE OBTAINED FROM OUTSIDE SOURCES. STOCKPILED OR IMPORTED TOPSOIL SHALL BE FERTILE, FRIABLE, SANDY LOAM SURFACE SOIL, FREE OF SUBSOIL, CLAY LUMPS, BRUSH, WEEDS, ROOTS, STUMPS, STONES LARGER THAN 1 INCH IN ANY DIMENSION, LITTER, OR ANY OTHER EXTRANEOUS OR TOXIC MATTER HARMFUL TO PLANT GROWTH.

B. ORGANIC CONTENT: IMPORTED TOPSOIL SHALL CONSIST OF ORGANIC MATERIALS AMENDED AS NECESSARY TO PRODUCE A BULK ORGANIC CONTENT OF AT LEAST 10 PERCENT AND NOT GREATER THAN 20 PERCENT, AS DETERMINED BY AASHTO-T-194.

C. COMPOST: COMPOST SHALL MEET THE DEFINITION FOR COMPOSTED MATERIALS AS DEFINED BY THE WASHINGTON STATE DEPARTMENT OF ECOLOGY.

D. SOIL AMENDMENTS (BUFFER AREAS ONLY).

D.A. FERTILIZER: WOODY PLANTINGS SHALL BE FERTILIZED WITH A SLOW-RELEASE GENERAL GRANULAR FERTILIZER (16-16-16), WITH APPLICATION RATES AS SPECIFIED BY MANUFACTURER. FERTILIZER SHALL BE APPLIED AFTER PLANTING PIT IS BACKFILLED, AND PRIOR TO APPLICATION OF MULCH. FERTILIZER SHALL NOT BE APPLIED BETWEEN NOVEMBER AND MARCH. NO FERTILIZER SHALL BE APPLIED WITHIN WETLAND AREAS.

D.B. SOIL MOISTURE RETENTION AGENT: A SOIL MOISTURE RETENTION AGENT, SUCH AS "SOILMOIST" OR EQUAL, SHALL BE INCORPORATED INTO THE BACKFILL OF EACH PLANTING PIT, PER MANUFACTURER'S INSTRUCTIONS. NO MOISTURE RETENTION AGENT SHALL BE APPLIED WITHIN WETLAND AREAS.

2.3 MULCH

A. BARK OR WOODCHIP MULCH SHALL BE DERIVED FROM DOUGLAS FIR, PINE, OR HEMLOCK SPECIES. THE MULCH SHALL NOT CONTAIN RESIN, TANNIN, OR OTHER COMPOUNDS IN QUANTITIES THAT WOULD BE DETRIMENTAL TO ANIMAL, PLANT LIFE, OR WATER QUALITY. SAWDUST SHALL NOT BE USED AS MULCH.

B. MULCH SHALL BE MEDIUM-COARSE GROUND WITH AN APPROXIMATELY 3-INCH MINUS PARTICLE SIZE. FINE PARTICLES SHALL BE MINIMIZED SO THAT NOT MORE THAN 30%, BY LOOSE VOLUME, WILL PASS THROUGH A US NO. 4 SIEVE.

2.4 MISCELLANEOUS MATERIALS

A. STAKES, DEADMEN AND GUY STAKES: SOUND, DURABLE, WESTERN RED CEDAR, OR OTHER APPROVED WOOD, FREE OF INSECT OR FUNGUS INFESTATION.

B. CHAIN-LOCK TREE TIES: ½-INCH WIDE, PLASTIC.

PART 3: EXECUTION

3.1 SOIL PREPARATION

A. PLANTING AREA CONDITIONS: CONTRACTOR SHALL VERIFY THAT PLANT INSTALLATION CONDITIONS ARE SUITABLE WITHIN THE PROJECT AREA(S). ANY UNSATISFACTORY CONDITIONS SHALL BE CORRECTED PRIOR TO START OF WORK. WHEN CONDITIONS DETRIMENTAL TO PLANT GROWTH ARE ENCOUNTERED, SUCH AS RUBBLE FILL, POOR DRAINAGE, COMPACTED SOILS, SIGNIFICANT EXISTING OR INVASIVE VEGETATION, OR OTHER OBSTRUCTIONS, CONTRACTOR SHALL NOTIFY THE PROJECT BIOLOGIST OR ECOLOGIST PRIOR TO PLANTING. THE BEGINNING OF WORK BY THE CONTRACTOR CONSTITUTES ACCEPTANCE OF CONDITIONS AS SATISFACTORY.

B. PLANTING IN GRADED AREAS: IN GRADED PLANTING AREAS PLANTS SHALL BE INSTALLED IN 6-INCHES OF NEWLY PLACED TOPSOIL.

C. SOIL DECOMPACTION/SCARIFICATION: SOILS IN GRADED/DISTURBED AREAS THAT ARE COMPACTED AND UNSUITABLE FOR PROPER PLANT GROWTH SHALL BE DECOMPACTED AND/OR SCARIFIED TO A MINIMUM DEPTH OF 6-INCHES PRIOR TO TOPSOIL INSTALLATION.

3.2 PLANTING

A. PLANT LAYOUT: PROPOSED LOCATIONS OF TREES AND SHRUBS SHALL BE STAKED AND IDENTIFIED WITH AN APPROVED CODING SYSTEM OR BY PLACEMENT OF THE ACTUAL PLANT MATERIAL. FOR LARGE GROUPINGS OF A SINGLE SPECIES OF SHRUB, LANDSCAPE CONTRACTOR MAY STAKE THE PLANTING BOUNDARIES.

B. OBTAIN LAYOUT APPROVAL FROM THE PROJECT BIOLOGIST OR ECOLOGIST PRIOR TO EXCAVATION OF PLANTING PITS.

C. PLANTING PIT DIMENSIONS:

1. PIT DEPTH: NOT TO EXCEED THE ROOT BALL OR CONTAINER DEPTH.
2. PIT WIDTH: MEASURED AT THE GROUND SURFACE, 2 TIMES THE WIDTH OF THE ROOT BALL OR CONTAINER, AS INDICATED IN TYPICAL PLANTING DETAILS.

A. SETTING PLANTS:

1. BALLED PLANTS: SET PLANTS IN POSITION AND BACKFILL 1/2 DEPTH OF BALL. COMPLETELY REMOVE CAGE AND TWINE FROM PLANT AND PULL BURLAP DOWN AS FAR AS POSSIBLE. COMPLETE BACKFILL AND SETTLE WITH WATER. ROOT COLLAR SHALL REMAIN 1 INCH ABOVE ADJACENT GRADE.
2. SHRUB/TREE PLANTING: SHRUB AND TREE STOCK SHALL BE PLANTED IN HAND-DUG HOLES ACCORDING TO PLANTING DETAILS SHOWN ON THE MITIGATION PLANS. SHRUB AND TREE ROOT BALLS SHALL BE SET SO THAT ROOT COLLARS ARE 1 INCH ABOVE ADJACENT GRADE. ALL BACKFILL SHALL BE GENTLY TAMPED IN PLACE.
3. SURFACE FINISH: FORM A SAUCER AS INDICATED ON TYPICAL PLANTING DETAILS, OR AS DIRECTED. GRADE SOIL TO FORM A BASIN ON THE LOWER SIDE OF SLOPE PLANTINGS TO CATCH AND RETAIN WATER.
4. ACTUAL PLANT SYMBOL QUANTITIES SHOWN ON THE PLANS SHALL PREVAIL OVER QUANTITIES SHOWN ON THE PLANT SCHEDULE IN THE EVENT OF A DISCREPANCY.

B. MULCHING:

1. GRADED BUFFER AREAS: ARE MULCHED PRIOR TO PLANT INSTALLATION AS DIRECTED IN THE GRADING SPECIFICATIONS.
2. WATER PLANTS THOROUGHLY AFTER MULCHING.

F. PRUNING: PRUNE IMMEDIATELY AFTER PLANTING ONLY AS DIRECTED BY THE PROJECT BIOLOGIST OR ECOLOGIST.

G. TREE STAKES AND TIES: STAKE DECIDUOUS AND EVERGREEN TREES 4 FEET OR OVER IN HEIGHT WITH ONE (1) STAKE PER TREE. STAKE TREES IMMEDIATELY AFTER PLANTING. PLACE STAKE AT THE OUTER EDGE OF THE ROOTS OR BALL, IN LINE WITH THE PREVAILING WIND, AND AT A 10 DEGREE ANGLE FROM THE TREE TRUNK. LOOSELY ATTACH STAKE TO TREE USING CHAIN-LOCK TIES. TREE SHOULD BE ABLE TO SWAY.

H. INSTALLING TEMPORARY IRRIGATION

1. GENERAL REQUIREMENTS: CONTRACTOR SHALL PROVIDE AN ABOVE-GROUND TEMPORARY IRRIGATION SYSTEM CAPABLE OF FULL HEAD-TO-HEAD COVERAGE OF ALL PLANTED PROJECT AREAS. THE TEMPORARY IRRIGATION SYSTEM SHALL EITHER UTILIZE CONTROLLER AND POINT OF CONNECTION (POC) FROM THE SITE IRRIGATION SYSTEM OR SHALL INCLUDE A SEPARATE POC AND CONTROLLER WITH A BACKFLOW PREVENTION DEVICE PER WATER JURISDICTION INSPECTION AND APPROVAL. THE SYSTEM SHALL BE ZONED TO PROVIDE OPTIMAL PRESSURE AND UNIFORMITY OF COVERAGE, AS WELL AS SEPARATION BETWEEN AREAS OF FULL SUN AND SHADE AND FOR SLOPES IN EXCESS OF 5 PERCENT. THE SYSTEM SHALL BE OPERATIONAL FOR A MINIMUM OF THE FIRST TWO GROWING SEASONS AFTER PLANTING (THE FIRST TWO YEARS OF THE PERFORMANCE MONITORING PERIOD), OR LONGER IF REQUIRED TO ENSURE PROPER PLANT ESTABLISHMENT. THE SYSTEM SHALL BE REMOVED UPON FINAL APPROVAL OF THE MITIGATION PROJECT AT THE END OF THE PERFORMANCE MONITORING PERIOD.
2. SYSTEM DESIGN AND MATERIALS: ELECTRONIC VALVES SHALL BE THE SAME MANUFACTURER AS THOSE USED FOR THE SITE IRRIGATION SYSTEM, OR SHALL BE RAIN BIRD PEB SERIES OR EQUAL. IF SYSTEM IS NOT CONTIGUOUS WITH THE SITE SYSTEM. VALVES SHALL BE SIZED TO ACCOMMODATE PRESSURE AND ZONE CONSUMPTION REQUIREMENTS OF THE SYSTEM AND SHALL BE INSTALLED BELOW GRADE IN CARSON (OR EQUAL) VALVE BOXES. WIRING SHALL BE INSULATED MULTI-STRAND, TAPED TO THE MAIN AT 6-INCH INTERVALS WITH DUCT TAPE WRAPS. ON-GRADE MAIN AND LATERAL LINES SHALL BE CLASS 200 PVC BELL PIPE WITH SOLVENT WELDED FITTINGS, SECURED IN-PLACE WITH WIRE STAPLES WHERE NECESSARY ON SLOPED AREAS. LINES SHALL BE PLACED 12 INCHES BELOW GRADE IN 4 INCH PCV SLEEVES WHERE VEHICULAR OR MAINTENANCE ACCESS IS NEEDED ACROSS LINES TO THE PROJECT AREA(S). MAXIMUM MAIN LINE SIZE SHALL BE 1½ INCHES AND MAY BE LOOPED BACK TO THE POC TO REDUCE PRESSURE LOSS. LATERAL LINES SHALL BE SIZED IN DECREASING DOWNSTREAM ORDER PER RAIN BIRD DESIGN STANDARDS; THE MINIMUM LATERAL SIZE SHALL BE ¾ INCH. HEADS SHALL BE ROTOR OR IMPACT TYPE INSTALLED 4 FEET ABOVE FINISHED GRADE ON 2-INCH DIAMETER WOOD TREE STAKES. STAKES SHALL BE SECURE IN THE GROUND, EMBEDDED TO A MINIMUM DEPTH OF 24 INCHES. HEADS AND ½ INCH PVC RISERS SHALL BE SECURED TO STAKES WITH CONSTRICTING HOSE CLAMPS; NO FUNNY PIPE SHALL BE USED. HEADS AND NOZZLES SHALL PROVIDE MATCHED PRECIPITATION RATES FOR EACH ZONE.
3. PROGRAMMING: IRRIGATION SYSTEM SHALL BE PROGRAMMED TO PROVIDE APPROXIMATELY 1/2 INCH OF WATER EVERY THREE DAYS DURING THE DRY SEASON (APPROXIMATELY JUNE 15TH TO OCTOBER 15TH). IRRIGATION AMOUNTS IN ZONES LOCATED IN THE SHADE OR ON STEEP SLOPES MAY BE REDUCED IF APPROVED BY THE PROJECT BIOLOGIST OR ECOLOGIST OR THE PROJECT ECOLOGIST/BIOLOGIST.
4. WATER AND POWER SUPPLY FOR SYSTEM: THE OWNER SHALL PROVIDE WATER AND ELECTRICITY FOR THE SYSTEM.
5. AS-BUILT DRAWING: A CHART DESCRIBING THE LOCATION OF ALL INSTALLED OR OPEN ZONES AND CORRESPONDING CONTROLLER NUMBERS SHALL BE PROVIDED BY THE CONTRACTOR AND PLACED INSIDE THE CONTROLLER AND GIVEN TO THE OWNER'S REPRESENTATIVE.
6. WARRANTY: THE IRRIGATION SYSTEM SHALL INCLUDE A ONE-YEAR WARRANTY AGAINST DEFECTS IN MATERIALS AND WORKMANSHIP FROM THE DATE OF FINAL PROJECT ACCEPTANCE. THE WARRANTY SHALL INCLUDE SYSTEM ACTIVATION AND WINTERIZATION FOR THE FIRST YEAR AND IMMEDIATE REPAIR OF THE SYSTEM IF IT IS OBSERVED TO BE MALFUNCTIONING.

J. CRITICAL AREAS FENCE AND SIGNS: INSTALL CRITICAL AREAS FENCE AND CRITICAL AREAS SIGNS WHERE SHOWN ON PLANS.

K. RESTORE EXISTING NATURAL OR LANDSCAPED AREAS:

1. EXISTING NATURAL OR LANDSCAPED AREAS THAT ARE DAMAGED DURING CONSTRUCTION SHALL BE RESTORED TO THEIR ORIGINAL CONDITION, UNLESS IMPROVEMENTS OR MODIFICATIONS ARE SPECIFIED FOR THOSE AREAS.
2. CONTRACTOR SHALL EXERCISE CARE TO PREVENT INJURY TO THE TRUNK, ROOTS, OR BRANCHES OF ANY TREES OR SHRUBS THAT ARE TO REMAIN. ANY LIVING, WOODY PLANT THAT IS DAMAGED DURING CONSTRUCTION SHALL BE TREATED WITHIN 24 HOURS OF OCCURRENCE, AND THE PROJECT BIOLOGIST OR ECOLOGIST SHALL BE NOTIFIED IMMEDIATELY OF THE INCIDENT. DAMAGE TREATMENT SHALL INCLUDE EVENLY CUTTING BROKEN BRANCHES, BROKEN ROOTS, AND DAMAGED TREE BARK. INJURED PLANTS SHALL BE THOROUGHLY WATERED AND ADDITIONAL MEASURES SHALL BE TAKEN, AS APPROPRIATE, TO AID IN PLANT SURVIVAL.

L. FINAL INSPECTION AND APPROVAL: THE CONTRACTOR SHALL NOTIFY THE PROJECT BIOLOGIST OR ECOLOGIST IN WRITING AT LEAST TEN DAYS PRIOR TO THE REQUESTED DATE OF A PROJECT COMPLETION INSPECTION. IF ITEMS ARE TO BE CORRECTED, A PUNCH LIST SHALL BE PREPARED BY THE PROJECT BIOLOGIST OR ECOLOGIST AND SUBMITTED TO THE CONTRACTOR FOR COMPLETION. AFTER PUNCH LIST ITEMS HAVE BEEN COMPLETED, THE PROJECT BIOLOGIST OR ECOLOGIST SHALL REVIEW THE PROJECT AGAIN FOR FINAL ACCEPTANCE OF PLAN IMPLEMENTATION. IF PUNCH LIST ITEMS REQUIRE PLANT REPLACEMENT, AND THE INSPECTION OCCURS OUTSIDE OF A SUITABLE PLANTING SEASON, PLANTS SHALL BE REPLACED DURING THE NEXT PLANTING SEASON.

M. AS-BUILT PLAN: CONTRACTOR IS RESPONSIBLE FOR VERIFYING PLANT LOCATIONS AND QUANTITIES ON THE PLANT SCHEDULE WITH THOSE REPRESENTED AS SYMBOLS ON THE MITIGATION PLANS. CONTRACTOR SHALL KEEP A COMPLETE SET OF PRINTS AT THE JOB SITE DURING CONSTRUCTION FOR THE PURPOSE OF RECORDING IN-THE-FIELD CHANGES OR MODIFICATIONS TO THE APPROVED PLANS. THIS INFORMATION SHALL BE UPDATED ON A DAILY BASIS AS NECESSARY.

PART 4: ONE YEAR CONTRACTOR WARRANTY

NOTE: THESE MAINTENANCE SPECIFICATIONS APPLY TO THE ONE-YEAR CONTRACTOR WARRANTY PERIOD ONLY. IF THIS MITIGATION PROJECT REQUIRES LONG-TERM PERFORMANCE MONITORING, AS DETERMINED BY THE GOVERNING JURISDICTION, THE MAINTENANCE SPECIFICATIONS AND GUIDELINES ASSOCIATED WITH THE PERFORMANCE MONITORING STANDARDS ARE INCLUDED IN THE MITIGATION REPORT ASSOCIATED WITH THIS PLAN SET, AND MAY ALSO BE INCLUDED ON A SEPARATE PLAN SHEET IF REQUIRED.

A. REVIEW OF MAINTENANCE REQUIREMENTS: CONTRACTOR SHALL REVIEW LANDSCAPE MAINTENANCE RECOMMENDATIONS WITH A QUALIFIED WETLAND BIOLOGIST FROM THE PROJECT BIOLOGIST OR ECOLOGIST WHO IS FAMILIAR WITH THE STATED GOALS AND OBJECTIVES OF THE PROJECT PLAN.

B. MAINTENANCE ACTIVITIES: CONTRACTOR SHALL MAINTAIN TREES AND SHRUBS FOR A PERIOD OF ONE YEAR FROM THE DATE OF FINAL ACCEPTANCE IN ORDER TO MAINTAIN HEALTHY GROWTH AND HABITAT DIVERSITY. MAINTENANCE ACTIVITIES SHALL INCLUDE, BUT ARE NOT LIMITED TO: (A) REPLACING PLANTS DUE TO MORTALITY, (B) TIGHTENING AND REPAIRING TREE STAKES, (C) RESETTING PLANTS TO PROPER GRADES AND UPRIGHT POSITIONS, AND (D) CORRECTING DRAINAGE PROBLEMS AS REQUIRED.

C. IRRIGATION:

1. SYSTEM MAINTENANCE AND REPAIR: THE CONTRACTOR SHALL BE RESPONSIBLE FOR ACTIVATING, WINTERIZING, MAINTAINING, AND CONTINUALLY VERIFYING THE ADEQUATE OPERATION OF THE TEMPORARY IRRIGATION SYSTEM F